GENERAL NOTES

1. SCOPE. THE WORK OF THIS SECTION INCLUDES ALL MECHANICAL WORK AND EQUIPMENT NEEDED FOR A COMPLETE AND PROPER INSTALLATION AND OPERATION. WORK INDICATED ON DRAWINGS BUT NOT MENTIONED IN THE SPECIFICATIONS, OR VICE VERSA, SHALL BE PERFORMED THE SAME AS IF SPECIFICALLY MENTIONED OR INDICATED IN BOTH. ANY SUPPLEMENTARY LABOR OR MATERIALS REQUIRED FOR A COMPLETE, APPROVED, AND PROPERLY OPERATING INSTALLATION SHALL BE FURNISHED WHETHER OR NOT INDICATED AND SPECIFIED WITHOUT COST TO THE OWNER.

2. THE HVAC CONTRACTOR SHALL BE RESPONSIBLE FOR THE ACQUISITION AND PAYMENT FOR ALL PERMITS, INSPECTIONS AND RELATED FEES FOR THIS INSTALLATION. ALL WORK SHALL COMPLY WITH ALL APPLICABLE CITY, COUNTY, STATE AND FEDERAL CODES. ALL MATERIAL DEVICES AND EQUIPMENT SHALL BE LOCAL CITY APPROVED FOR SUCH INSTALLATION. THE USE OF THOSE MANUFACTURED DEVICES LISTED IN SECTION 2-5301(G) CEC TITLE 24 ENERGY CODE SHALL BE LIMITED TO ONLY THOSE THAT HAVE BEEN CERTIFIED TO THE CALIFORNIA ENERGY COMMISSION, CITY, AND STATE.

3. THE INSTALLATION SHALL COMPLY WITH ALL OF THE LATEST APPLICABLE ORDINANCES, REGULATIONS AND CODES OF ALL AGENCIES HAVING JURISDICTION, INCLUDING THE 2019 CALIFORNIA MECHANICAL CODE, AND CITY PASADENA BUILDING AND SAFETY DEPARTMENT AND ALL OTHER AUTHORITIES HAVING JURISDICTION.
   A) NOTHING IN THESE DRAWINGS AND SPECIFICATIONS IS TO BE CONSTRUED TO PERMIT WORK IN VIOLATION THEREOF.
   B) NO EXTRAS WILL BE PAID FOR FURNISHING ITEMS REQUIRED BY THE CODES, BUT NOT SPECIFIED OR SHOWN ON THE DRAWINGS.
   C) RULINGS AND INTERPRETATIONS OF THE ENFORCING AGENCIES SHALL BE CONSIDERED AS PART OF THE CODE.

4. CONTRACTOR SHALL BECOME FAMILIAR WITH ALL CONDITIONS PRIOR TO SUBMITTING BID PROPOSAL AND VERIFY SCOPE OF WORK REQUIRED.
5. COORDINATE ALL WORK WITH OTHER TRADES. MAINTAIN PROPER CLEARANCES AND HEADROOM AT EQUIPMENT AND ETC. FOR INSPECTION AND SERVICE.
6. ALL MATERIALS AND EQUIPMENT PROVIDED SHALL BE NEW.
7. GUARANTEE:
   A) ALL MATERIALS, DEVICES AND EQUIPMENT PROVIDED AND/OR INSTALLED UNDER THIS DIVISION OF SPECIFICATIONS SHALL BE NEW AND GUARANTEED FOR A PERIOD OF ONE YEAR FROM THE DATE OF FINAL COMPLETION OF THE WORK, OR LONGER, WHERE SPECIFIED HEREIN. SHOULD ANY TROUBLE DEVELOP DURING THIS PERIOD DUE TO DEFECTIVE MATERIALS OR FAULTY WORKMANSHIP, THE CONTRACTOR SHALL FURNISH ALL NECESSARY LABOR AND MATERIALS TO CORRECT THE TROUBLE WITHOUT ANY COST TO THE OWNER. ANY DEFECTIVE MATERIALS OR INFERIOR WORKMANSHIP NOTICED AT THE TIME OF INSTALLATION AND/OR DURING THE GUARANTEE PERIOD SHALL BE CORRECTED IMMEDIATELY TO THE ENTIRE SATISFACTION OF THE OWNER AND THE ARCHITECT.
   B) HVAC CONTRACTOR SHALL GUARANTEE ALL WORKMANSHIP AND THE SUCCESSFUL AND SATISFACTORY OPERATION OF ALL SYSTEM AND APPARATUS INSTALLED FOR A PERIOD OF ONE YEAR FROM THE DATE OF FINAL ACCEPTANCE, WITHOUT COST TO THE OWNER.
8. CONTRACTOR SHALL FORWARD THE NUMBER OF SUBMITTAL COPIES REQUIRED BY SPECIFICATION TO THE OWNER'S REPRESENTATIVE FOR APPROVALS AS FOLLOWS:
   A) MANUFACTURER'S DATA: FOR EACH MANUFACTURED ITEM, DESCRIPTIVE LITERATURE CATALOG MODEL NO., AND ALL OTHER INFORMATION NECESSARY TO ESTABLISH CONTRACT COMPLIANCE.
   B) SHOP DRAWINGS FOR INSTALLATION OF EQUIPMENT, DUCTWORK AND PIPING.
9. THE CONTRACTOR SHALL MAINTAIN "RECORD" REPRODUCIBLE DRAWINGS OF ALL WORK, AS THE JOB PROGRESSES. A SEPARATE SET OF DRAWINGS FOR THIS PURPOSE ONLY SHALL BE KEPT AT THE JOB SITE AT ALL TIMES AND IT SHALL BE REQUIRED THAT THESE TO BE KEPT UP TO DATE.
10. THE HVAC CONTRACTOR SHALL TEST, ADJUST AND PLACE IN PROPER OPERATION ALL SYSTEMS INTALLED UNDER THE WORK OF THIS SECTION.
11. PROVIDE A WRITTEN REPORT ON SYSTEM OPERATION, SETTING AND CONDITION OF ALL EQUIPMENT.
12. WHEN ALL REQUIRED PORTIONS OF THE WORK HAVE BEEN COMPLETED, AND AT A TIME DESIGNATED BY THE OWNER, THOROUGHLY DEMONSTRATE TO THE OWNER'S MAINTENANCE PERSONNEL THE OPERATION AND MAINTENANCE OF ALL ITEMS INSTALLED UNDER THE WORK OF THIS SECTION.
13. THE CONTRACTOR SHALL PROVIDE THE NUMBER OF SUBMITTAL COPIES REQUIRED BY SPECIFICATION TO BUILDING OWNER. PROVIDE COPIES OF SYSTEM EQUIPMENT CONTROL DIAGRAMS, REPORTS, MAINTENANCE AND OPERATING BROCHURES KEYED TO UNIT LABELING, WITH SERVICE INSTRUCTION AND PARTS LIST.
14. THE GENERAL CONTRACTOR SHALL PROCURE THE SERVICES OF AN INDEPENDENT AIR BALANCE AND TESTING AGENCY (THE HVAC CONTRACTOR RESPONSIBLE FOR THE INSTALLATION MAY NOT PERFORM THE AIR BALANCE) TO PERFORM TOTAL BALANCING. THE AIR BALANCE CONTRACTOR SHALL BE CERTIFIED BY THE ASSOCIATED AIR BALANCE COUNCIL (AABC). THIS WORK SHALL CONFORM TO AABC SPECIFICATIONS REFERRED TO IN CHAPTERS 17 THROUGH 26 OF AABC NATIONAL STANDARD.
15. PERMANENT ACCESS TO ALL ROOF MOUNTED EQUIPMENT SHALL BE PROVIDED.
16. DUCTWORK:
   A) ALL DUCTWORK, EXCEPT AS NOTED SHALL BE GALVANIZED STEEL AND SHALL BE CONSTRUCTED, INSTALLED, SEALED AND INSULATED AS PROVIDED IN CHAPTER 6 OF THE UNIFORM MECHANICAL CODE/2019 CALIFORNIA MECHANICAL CODE AND C.E.C.
   B) SEAL ALL JOINTS DURING INSTALLATION WITH DURO DYNE S-2 SEALER/FIBERGLASS SYSTEM OR HARDCAST (DUCT TAPE IS NOT ACCEPTABLE).
   C) DUCT RUNS ARE SCHEMATIC IN THAT THEY DO NOT SHOW ALL OFFSETS AND SPECIAL FITTINGS REQUIRED FOR A COMPLETE INSTALLATION. EXACT LOCATIONS, OFFSETS AND AVAILABLE SPACE ARE TO BE CHECKED AND DETERMINED IN THE FIELD. CHANGES IN SIZE, REQUIRED TO MEET FIELD CONDITIONS, SHALL BE MADE USING THE EQUAL FRICTION METHOD.
   D) ALL DUCTWORK SHALL BE CONSTRUCTED, ERECTED, BRACED, SUPPORTED AND TESTED IN ACCORDANCE WITH LATEST STANDARDS ADOPTED BY "SMACNA" AND SHALL COMPLY WITH THE STATE OF CALIFORNIA ENERGY CONSERVATION STANDARDS, AND CMC CHAPTER 6
   E) PROVIDE SHEET METAL FLASHINGS FOR DUCTS AND PIPES PASSING THROUGH ROOFS AND/OR OUTSIDES WALLS AND HOT MOP AND/OR SEAL AS REQUIRED FOR A WATER AND WEATHER TIGHT INSTALLATION.
   F) ALL BRANCH DUCT RUNS ARE TO HAVE VOLUME CONTROL DAMPERS WITH LOCKING QUADRANTS AND SHAFT BEARINGS, FOR BALANCING.
   G) ALL DUCT CONNECTIONS BETWEEN BRANCH DUCTS AND DIFFUSER/GRILLES SHALL BE MADE WITH LOW PRESSURE ACOUSTICAL FACTORY PRE-INSULATED FLEXIBLE DUCT UNLESS SHOWN OTHERWISE. FLEXIBLE DUCTS SHALL BE CASCO "L-181M" (R-6.0) OR CALFLEX (R,6.0). FLEXIBLE DUCTS SHALL BE SUPPORTED AT OR NEAR MID LENGTH WITH 2" WIDE 28 GA. STEEL HANGER COLLAR ATTACHED TO THE STRUCTURE WITH AN APPROVED DUCT HANGER. INSTALLATION SHALL MINIMIZE SHARP RADIUS TURNS OR OFFSETS. FLEXIBLE DUCT CAN BE UTILIZE WHERE ROUND DUCT ARE SPECIFIED IN RESIDENTIAL OCCUPANCY ONLY. USE RIGID DUCTS FOR NON-RESIDENTIAL OCCUPANCY AND FLEXIBLE DUCT LENGTH IS LIMITED TO 5' MAXIMUM IN NON-RESIDENTIAL LOCATIONS.
   H) DUCT INSULATION:
      a) ALL SUPPLY AND RETURN DUCTS SHALL BE INSULATED.
      b) ALL SUPPLY AND RETURN DUCTS EXPOSED TO WEATHER (LOCATED ON ROOF OR EXTERIOR OF THE BUILDING SHALL BE LINED WITH 2" 1.5 lb. DENSITY FIBER GLASS WITH VINYL FACE TO AIR SIDE WITH MINIMUM INSULATION VALUE OF R-8. ALL WEATHER EXPOSED DUCTS, EQUIPMENT, AND DEVICES SHALL BE COMPLETELY WEATHERPROOFED.
      c) IN UNCONDITIONED SPACES SUCT AS ATTIC, WHERE ATTIC INSULATION IS AT THE CEILING, ETC. SHALL BE INSULATED WITH 2" MIN. R-8 VALUE.
      d) ALL CONCEALED (SUCH AS ABOVE THE CEILING, INSIDE THE SOFFIT AND IN ATTICS WHERE ROOF INSULATION IS INSTALLED AT THE ROOF), SUPPLY AND RETURN AIR DUCTS EXCEPT WHERE LINED DUCT ARE SPECIFIED SHALL BE INSULATED WITH 1 lb. FIBERGLASS BATT INSULATION ONE INCH. ON RETURN, 2" ON SUPPLY WITH ALUMINUM FOIL FACING WIRED IN PLACE AT 18" ON CENTER MAXIMUM. THE INSULATION VALUE SHALL BE MINIMUM OF R-8.
      e) EXPOSED SUPPLY AND RETURN DUCTS INSIDE CONDITIONED SPACE, EXCEPT WHERE NOTED DOES NOT REQUIRED TO BE INSULATED.
      f) DUCT LININGS, FLEXIBLE VIBRATION-ISOLATION CONNECTORS, DUCT CONNECTORS AND DUCT TAPE TO BE APPROVED MATERIAL. INSULATION AND DUCTWORK TO BE APPROVED BEFORE COVERING WITH INSULATION.
      g) THE SUPPLY AND RETURN DUCTWORK LOCATED WITHIN 10 FEET FROM EQUIPMENT SHALL BE ACOUSTICALLY LINED WITH 1-1/2" OF ACOUSTICAL LINING. R-6.0 MINIMUM
   I) FACTORY-MADE AIR DUCTS AND CONNECTORS SHALL BE LISTED AND LABELED IN ACCORDANCE WITH UL 181 AND INSTALLED IN ACCORDANCE WITH THE TERMS OF THEIR LISTING, THE MANUFACTURER'S INSTALLATION INSTRUCTION, AND SMACNA HVAC DUCT CONSTRUCTION STANDARDS - METAL AND FLEXIBLE..
17. ALL NEW DUCT WORK DIMENSIONS ARE INSIDE CLEAR.
18. ALL DUCT INSULATION SHALL MEET UL-181 CLASS AND NFPA 90A AND 90B, AND FLAME SPREAD AND SMOKE DENSITY FHC 25/50, "R" VALUE OF INSULATION TO BE MIN. OF R-8. THE USE OF INSULATION MATERIAL IS LIMITED TO THOSE THAT HAVE BEEN CERTIFIED TO THE CALIFORNIA ENERGY COMMISSION. FILTERS AND ADHESIVES SHALL COMPLY WITH SECTION 1103.
19. FIRE DAMPERS AND COMBINATION SMOKE AND FIRE DAMPERS ARE TO BE PROVIDED AND INSTALLED AS REQUIRED BY CODE, STATE AND LOCAL FIRE MARSHALL. FIRE DAMPERS AND COMBINATION SMOKE AND FIRE DAMPERS SHALL BE LISTED AND APPROVED BY STATE FIRE MARSHAL WITH PERMANENT IDENTIFICATION. PROVIDE ACCESS AS REQUIRED FOR INSPECTION AND SERVICE.
20. ALL CONCEALED SPACES USED TO CONVEY CIRCULATING AIR SUPPLY SHALL BE OF INCOMBUSTIBLE MATERIAL AND CONTAIN NO COMBUSTIBLE (INCLUDING EXPOSED COMMUNICATION CABLES).

GENERAL NOTES (CONT.)

21. ALL CONNECTION BETWEEN AC UNITS/FANS AND DUCTWORKS SHALL HAVE FIREPROOF, HEAVY DUTY FLEX-CONNECTIONS (LA COUNTY APPROVED WITH THREE INCHES MINIMUM CLEARANCE. ISOLATE ALL HVAC UNITS, FANS AND EQUIPMENT FROM THE BUILDING STRUCTURE WITH APPROVED ISOLATION MOUNTS. PROVIDE SEISMIC RESTRAINTS FOR ALL UNITS AS REQUIRED BY CODE.
22. ALL TRANSVERSE JOINTS ON ALL AIR SUPPLY DUCTS INSTALLED WHERE AIR LEAKAGE IS NON-BENEFICIAL TO THE OCCUPIED AREAS SHALL BE SEALED WITH MASTIC OR TAPE.
23. INSPECTION TO BE MADE AND DUCT WORK TO BE APPROVED BEFORE COVERING WITH INSULATION.
24. ALL APPLIANCES DESIGNED TO BE FIXED IN POSITION SHALL BE SECURELY FASTENED IN PLACE.
25. PROVIDE A 3/4" MINIMUM TRAPPED CONDENSATE DRAIN FROM EACH UNIT AS SHOWN ON PLANS, IF NOT SHOWN, EXTEND FULL SIZE TO AN APPROVED RECEPTOR. CONDENSATE DRAIN PIPE TO BE COPPER TYPE "M" WITH COPPER FITTING AND SOLDERED JOINTS.
26. ROOF MOUNTED EQUIPMENT, INCLUDING AIR INTAKES, SHALL BE LABELED AS TO THE SPACE IT SERVES.
27. REFRIGERATION SYSTEM TO BE LABELED TO COMPLY WITH LOCAL CODES.
28. ALL UNITS SHALL BE PROVIDED WITH FILTERS IN ACCORDANCE WITH MFGR'S RECOMMENDATION, WITH ACCESS AS REQUIRED.
29. THE AIR FLOW CFM'S (CUBIC FEET PER MINUTE) INDICATED IN THE EQUIPMENT SCHEDULE ARE NOMINAL, REFER TO THE FLOOR PLANS FOR REQUIRED AIR FLOW CFM'S FOR EACH UNIT.
30. PROVIDE VIBRATION ISOLATIONS ON ALL MECHANICAL EQUIPMENT WITH MOVING PARTS. ALL VIBRATION ISOLATOR SHALL BE SPRING TYPE UNLESS INDICATED OTHERWISE.
31. REFER TO DIFFUSER AND GRILLE SCHEDULE FOR SIZES OF ALL NEW AIR DISTRIBUTION DEVICES AND RESPECTIVE BRANCH DUCT SIZES.
32. REFER TO ARCHITECTURAL REFLECTED CEILING PLAN FOR EXACT LOCATION OF AIR DEVICES. ALL AIR DEVICES, FRAME STYLES SHALL BE COMPATIBLE WIHT CEILING IN WHICH IT IS LOCATED.
33. AIR DISTRUTION:
   A) SIDEWALL SUPPLY OUTLETS SHALL BE DOUBLE DEFLECTION TYPE WITH KEY OPERATED OPPOSED BLADE DAMPERS (KRUEGER 5880 OR APPROVED EQUAL).
   B) EXHAUST REGISTERS SHALL BE SINGLE DEFLECTION WITH OBD (KRUEGER 1190 OR APPROVED EQUAL.)
   C) CEILING RETURN GRILLE SHALL BE SINGLE DEFLECTION (KRUEGER 1190 OR APPROVED EQUAL)
   D) SIDEWALL RETURN GRILLE SHALL BE SINGLE DEFLECTION (KRUEGER 5580H OR APPROVED EQUAL)
   E) EACH AND EVERY DIFFUSER SHALL BE PROVIDED WITH ITS OWN DEDICATED BALANCING DAMPERS INSTALLED AT THE FARTHEST POSSIBLE BRANCH FOR EACH DIFFUSER. VOLUME DAMPERS MUST BE EQUIPPED WITH LOCKING QUADRANTS AND SHAFT BEARINGS.
   F) PROVIDE YOUNG REGULATORS IN LIEU OF VOLUME DAMPERS OVER ALL NON-ACCESSIBLE CEILINGS
   F) FINISH TO BE OFF-WHITE BAKED ENAMEL TO MATCHMETAL CEILING GRID.
   G) DUCTS AND PLENUMS BEHIND AND VISIBLE THROUGH AIR INLETS AND OUTLETS MUST BE PAINTED FLAT BLACK. AIR OUTLETS BEHIND PEROATED FACE PANEL MUST BE PAINTED FLAT BLACK.
   H) CEILING SUPPLY DIFFUSERS FOR T-BAR CEILING SHALL BE KRUEGER 1240P (OR APPROVED EQUAL WITH OBD
   I) CEILING SUPPLY DIFFUSERS FOR GYPSUM SHALL BE KRUEGER 1240 (OR APPROVED EQUAL) WITH OBD
34. TESTING AND ADJUSTING:
   A) EACH PIECE OF EQUIPMENT FOR THE SYSTEMS SHALL BE ADJUSTED AND READJUSTED TO INSURE PROPER FUNCTION OF ALL CONTROLS, PROPER DISTRIBUTION OF AIR, ELIMINATION OF DRAFTS, NOISE AND VIBRATION, AND LEFT IN FIRST-CLASS OPERATION CONDITION, SUBJECT TO ARCHITECT'S APPROVAL BY AABC CERTIFIED AIR BALANCE CONTRACTOR.
   B) SUBMIT TO THE ARCHITECT SIX COPIES OF THE REPORT ON THE OPERATION, INCLUDING AIR QUANTITIES, FAN SPEEDS, PULLEY SIZES AND MOTOR LOADS, "RECORD" DRAWINGS, EQUIPMENT PAMPHLETS, AND ALL PERTINENT DATA, INCLUDING CONTROL DIAGRAMS AND MAINTENANCE BROCHURES BY AABC CERTIFIED AIR BALANCE CONTRACTOR.
35. THE REFRIGERANT PIPING OUTSIDE THE BUILDING AND BELOW GRADE SHALL BE INSTALLED INSIDE 4"ABS PIPE SLEEVE WITH BOTH ENDS SEALED. THE PIPE SLEEVE SHALL BE BURIED 24" BELOW GRADE.
36. ALL EQUIPMENT SHALL BE SEISMICALLY BRACED.
37. ALL MECHANICAL EQUIPMENT SHALL BE BRACED OR ANCHORED TO RESIST A HORIZONTAL FORCE ACTING IN ANY DIRECTION USING THE FOLLOWING CRITERIA:
   a. FIXED EQUIPMENT ON GRADE - 33% OF OPERATING WEIGHT.
   b. FIXED EQUIPMENT ON STRUCTURE - 50% OF OPERATING WEIGHT.
   FOR FLEXIBLY MOUNTED EQUIPMENT USE (2) TIMES THE ABOVE VALUES. FOR SIMULTANEOUS VERTICAL FORCE USE 1/3 TIMES THE HORIZONTAL FORCE. WHERE ANCHORAGE DETAILS ARE NOT SHOWN ON THE DRAWINGS, THE FIELD INSTALLATION SHALL BE SUBJECT TO THE APPROVAL OF THE STRUCTURAL ENGINEER AN DLA COUNTY FIELD ENGINEER.
38. ALL SEISMIC RESTRAINT SHALL BE AS REQUIRED BY THE CALIFORNIA ADMINISTRATIVE CODE, TITLE 24, DIVISION T22.
39. DRAWINGS ARE SCHEMATIC IN NATURE AND NOT DRAWN TO SCALE. CONTRACTOR IS RESPONSIBLE FOR COORDINATING EXACT ROUTING OF ALL SERVICES WITH CONDITIONS IN THE FIELD AND OTHER TRADES.
40. ALL APPLIANCE AND PLUMBING VENTS AND DISCHARGE OUTLET OF EXHAUST FANS SHALL BE AT LEAST 10 FT. IN HORIZONTAL DIRECTION, OR 3 FT. ABOVE THE OUTSIDE-AIR INTAKES FOR HVAC UNITS.
41. MECHANICAL EQUIPMENT MUST BE CONNECTED TO MIN. ONE (1) VERTICAL 12" GA. WIRE ATTACHED TO OPPOSING CORNERS ALONG THE EQUIPMENT DIAGONAL. THESE WIRES MAY BE SLACK. IN ADDITION PROVIDE SPRING VIBRATION ISOLATORS ON ALL CORNERS OF EQUIPMENT
42. BACKDRAFT DAMPERS TO BE INSTALLED ON ALL OUTSIDE AIR INTAKES, EXHAUST OUTLETS, AND EXHAUST/SUPPLY FANS AND MEET CAL GREEN INSULATION AND LEAKAGE REQUIREMENTS. AS WELL AS FREE AREA'S NOTED ON PLANS
43. ALL HYDRONIC HEATING SUPPLY AND RETURN PIPING SHALL BE INSULATED.
   a. 1-1/2" OF R-6 INSULATION FOR UP TO '-1/2" PIPE.
   b. 2" OF R-6 INSULATION FOR 1-1/2" PIPE AND LARGER.
44. PROVIDE EXPANSION JOINTS IN ALL DUCTS AND PIPES CROSSING EXPANSION AND SEISMIC JOINTS.
45. VERIFY FINAL LOCATION OF THERMOSTATS AND TEMPERATURE SENSORS WITH FURNITURE PLANS AND OWNER'S REPRESENTATIVE PRIOR TO INSTALLATION. INSTALL THERMOSTATS 48" A.F.F.
46. ALL MECHANICAL EQUIPMENT SHALL BE LABELED WITH BRASS NAMEPLATES AND DUCTWORK AND PIPING PROVIDED WITH LABELS AND PIPE MARKERS. CONTRACTOR TO SUBMIT FOR APPROVAL.
47. FIRE DEPARTMENT APPROVAL SHALL BE REQUIRED ON FIRE PROTECTION SYSTEM FOR GREASE HOOD AND DUCTS.
48. ALL EQUIPMENT SHALL BE INSTALLED IN STRICT ACCORDANCE WITH THE EQUIPMENT MANUFACTURER'S RECOMMENDATIONS. PROVIDE ALL FITTINGS, TRANSITIONS, DAMPERS, VALVES, AND OTHER DEVICES REQUIRED FOR A COMPLETE WORKABLE INSTALLATION PER CMC AND CEC CODES
49. COORDINATE ALL WORK WITH OTHER TRADES. MAINTAIN PROPER ADA & EQUIPMENT CLEARANCES AND HEADROOM AT EQUIPMENT, VALVES, DUCTWORK, PIPING, METERS FOR INSPECTION AND SERVICE.
50. ALL EQUIPMENT, DUCTS, PIPING, AND OTHER DEVICES AND MATERIALS INSTALLED OUTSIDE OF THE BUILDING OR OTHERWISE EXPOSED TO THE WEATHER SHALL BE COMPLETELY WEATHERPROOFED.
51. MECHANICAL CONTRACTOR SHALL SUBMIT COORDINATION SHOP DRAWINGS SHOWING COORDINATION WITH ARCHITECTURAL, STRUCTURAL, ELECTRICAL, PLUMBING, AND FIRE SPRINKLER TRADES FOR APPROVAL.
52. MECHANICAL CONTRACTOR SHALL SUBMIT COORDINATION SHOP DRAWINGS SHOWING COORDINATION WITH ARCHITECTURAL, STRUCTURAL, ELECTRICAL, PLUMBING, AND FIRE SPRINKLER TRADES FOR APPROVAL. SHOP DRAWINGS TO INCLUDE ROUTING FOR REFRIGERANT LINES WHICH ARE CODE PROHIBITED TO RUN THRU CORRIDORS. ROUTING OF ALL EQUIPMENT, DUCTS, AND PIPING SHALL BE APPROVED BY ENGINEER AND ARCHITECT VIA FORMAL SHOP DRAWINGS PRIOR TO INSTALLATION IN THE FIELD.

CALIFORNIA GREEN NOTES

1. HVAC SYSTEM AND CONTROLS SHALL BE TESTED AND BALANCED TO MEET AABC'S NATIONAL STANDARD'S FOR TOTAL SYSTEM BALANCE (6TH EDITION)
2. PRIOR TO PERMIT BEING FINALED, A COMPLETE REPORT OF THE TESTING AND ADJUSTING SHALL BE PROVIDED TO THE OWNER/OWNER'S REPRESENTATIVE AND TO THE INSPECTOR.
3. AN OPERATION & SYSTEMS MANUAL SHALL BE PROVIDED TO THE OWNER OR REPRESENTATIVE AND TO THE FIELD INSPECTOR AT THE TIME OF FINAL INSPECTION.
4. AT THE TIME OF ROUGH INSTALLATION, OR DURING STORAGE ON THE CONSTRUCTION SITE AND UNTIL FINAL STARTUP OF THE HEATING, COOLING, AND VENTILATING EQUIPMENT, ALL DUCTS AND OTHER RELATED AIR DISTRIBUTION COMPONENT OPENINGS SHALL BE COVERED WITH TAPE, PLASTIC, SHEET METAL, OR OTHER ACCEPTABLE METHODS TO REDUCE THE AMOUNT OF DUST, WATER, AND DEBRIS WHICH MAY ENTER THE SYSTEM
5. THE HVAC, REFRIGERATION, AND FIRE SUPPRESSION EQUIPMENT SHALL NOT CONTAIN CFC OR HALONS.
6. FOR NONRES OCCUPANCIES APPLICATION-PROVIDE TEMPORARY VENTILATION DURING CONSTRUCTION IN ACCORDANCE WITH SECTION 121 OF THE CALIFORNIA ENERGY CODE, CCR, T-24, PART 6 AND CHAPTER 4 OF CCR, TITLE 8 AND AS LISTED IN ITEMS 1 AND 2 IN SECTION A5.504.1.1.
7. HVAC SYSTEM INSTALLERS SHALL BE TRAINED AND CERTIFIED IN THE PROPER INSTALLATION OF HVAC SYSTEMS.
8. SPECIAL INSPECTORS EMPLOYED BY THE ENFORCING AGENCY MUST BE QUALIFIED AND ABLE TO DEMONSTRATE COMPETENCE IN THE DISCIPLINE THEY ARE INSPECTING.
9. THE PERMANENT HVAC SYSTEM SHALL ONLY BE USED DURING CONSTRUCTION IF NECESSARY TO CONDITION THE BUILDING OR AREAS OF ADDITION OR ALTERATION WITHIN THE REQUIRED TEMPERATURE RANGE FOR MATERIAL AND EQUIPMENT INSTALLATION. IF THE HVAC SYSTEM IS USED DURING CONSTRUCTION, USE MERV 8 RETURN AIR FILTERS. REPLACE ALL FILTERS IMMEDIATELY PRIOR TO OCCUPANCY, OR, IF IF THE BUILDING IS OCCUPIED DURING ALTERATION, AT THE CONCLUSION OF CONSTRUCTION.
10. THE HEATING AND AIR-CONDITIONING SYSTEMS SHALL BE SIZED AND DESIGNED USING ANSI/ACCA MANUAL J-2011, ANSI/ACCA 29-D-2014 OR ASHRAE HANDBOOKS AND HAVE THEIR EQUIPMENT SELECTED IN ACCORDANCE WITH ANSI/ACCA 3 MANUAL S-2014.

CALIFORNIA GREEN NOTES (CONT.)

11. NEW MECHANICALLY VENTILATED BUILDINGS WITHIN 1000 FEET OF A FREEWAY SHALL PROVIDE REGULARLY OCCUPIED AREAS OF THE BUILDING WITH A MERV 13 FILTER FOR OUTSIDE AND RETURN AIR. FILTERS SHALL BE INSTALLED PRIOR TO OCCUPANCY AND RECOMMENDATIONS FOR MAINTENANCE WITH FILTERS OF THE SAME VALUE SHALL BE INCLUDED IN THE OPERATION AND MAINTENANCE MANUAL.

HERS RATER / HVAC CONTRACTOR TESTING

A. GENERAL CONTRACTOR SHALL ENGAGE THE SERVICES OF AN INDEPENDENT HERS RATER, THAT SPECIALIZES IN AND WHOSE BUSINESS IS LIMITED TO HERS RATING OF AIR CONDITIONING SYSTEMS, TO TEST, ADJUST AND BALANCE THE AIR DISTRIBUTION SYSTEMS, COMPONENTS AND EQUIPMENT. FURNISH TO THE ARCHITECT, IN WRITING, A STATEMENT EVIDENCING THAT THE TESTING COMPANY IS QUALIFIED BY PAST EXPERIENCE IN THIS TYPE OF WORK AND HAS SATISFACTORILY TESTED A LEAST THREE (3) SYSTEMS OF COMPARABLE TYPES AND SIZES.
   1. DUCTWORK LEAKAGE MUST BE LESS THAN 6 CFM TO OUTDOORS PER 100 SQUARE FEET OF CONDITIONED SPACE, THOUGH DUCT LEAKAGE TESTS CAN BE WAIVED IF DUCTS AND EQUIPMENT ARE LOCATED IN CONDITIONED SPACE AND THE HOME'S ENVELOPE LEAKAGE IS LESS THAN 0.25 CFM PER 50 SQUARE FOOT OF BUILDING ENVELOPE. (MEETING CALIFORNIA'S TITLE 24 TIGHT DUCT STANDARD OF 6% OR LESS DUCT LEAKAGE OF TOTAL AIR FLOW SATISFIES THIS REQUIREMENT.)
   2. THE INSTALLING HVAC CONTRACTOR IS TO TEST 100% OF ALL HEATING/COOLING SYSTEMS INSTALLED. THE INSTALLING HVAC CONTRACTOR IS TO PROVIDE THE HERS RATER FOR THE PROJECT SIGNED CF2R FORMS FOR EVERY SYSTEM INSTALLED.
   3. TWO (2) DUCT LEAKAGE TESTING OF ALL SYSTEM SHALL BE PERFORMED THE FIRST DUCT LEAKAGE TESTING SHALL BE FOR THE NEW RETURN PLENUM AND DUCT SYSTEM. THE SECOND DUCT LEAKAGE TEST SHALL BE PERFORMED FOR THE ENTIRE SYSTEM. SYSTEMS WHERE FANCOILS ARE INSTALLED AFTER DRYWALL SHOULD BE TESTED EVEN IF ORIGINAL DUCTWORK AND RETURN AIR HAS BEEN TESTED.
   4. REFRIGERANT CHARGED TESTING SHALL BE PROVIDED FOR EACH AND EVERY INSTALLED SYSTEM BY HVAC CONTRACTOR IN BOTH SUPERHEAT AND SUBCOOLING MODES FOLLOWING MANUFACTURER'S SUGGESTED REFRIGERANT CHARGE DURING BOTH TESTING MODES GIVEN REFRIGERANT SIZES, ELBOWS, AND INSTALLED LENGTHS. REFRIGERANT SHALL BE ADDED OR REMOVED FROM THE SYSTEM TO MEET REQUIRED CHARGEDS DURING BOTH TESTING MODES.
   5. VENTILATION AIRFLOW TESTING SHALL BE PROVIDED IN ACCORDANCE WITH HERS STANDARD FOR BOTH EXHAUST AND OUTSIDE AIR DUCT SYSTEMS.
   6. AIRFLOW FAN WATT DRAW TESTING SHALL OCCUR TO CONFIRM SYSTEM DOES NOT EXCEED 0.58W/CFM AND EXCEEDS MINIMUM AIRFLOW OF 350CFM/TON.
   7. WHOLE BUILDING VENTILATION AIRFLOW REQUIRED BY SEC. 4 OF ASHRAE STANDARD 6.2 SHALL BE CONFIRMED THROUGH FIELD VERIFICATION AND DIAGNOSTIC TESTING.
   8. THE RATER CONDUCTS FIELD VERIFICATION AND TAKES REPRESENTATIVE PHOTOS OF MASTIC ON THE JOINTS, THE BOOTS, AND AT THE AIR HANDLER UNIT

SEISMIC RESTRAINTS

ALL PLUMBING AND HVAC EQUIPMENT SHALL BE SECURED TO STRUCTURE PER "GUIDELINES FOR SEISMIC RESTRAINTS" OF MECHANICAL SYSTEMS AND PLUMBING PIPING SYSTEMS. FOLLOW LATEST SMACNA AND PPIC GUIDELINES. TEL: (213)487-3790 ISOLATE ALL PLUMBING EQUIPMENT FROM STRUCTURE WITH APPROVED TYPE VIBRATION ISOLATOR MOUNTS.

PLAN CHECK NOTES

1. EACH HVAC SYSTEM SHALL BE EQUIPPED WITH AT LEAST ONE AUTOMATIC DEVICE TO SETBACK OR SHUTOFF THE SYSTEM DURING PERIODS OS NON-USE OR ALTERNATE USE OF BUILDING SPACES OR ZONES SERVED BY THE SYSTEM. THERMOSTAT AND TIMER SHALLB READILY ACCESSIBLE AND MANUALLY ADJUSTABLE.
   EXCEPTION: SMALL ANCILLARY HVAC SYSTEM WHOSE INPUT POWER IS LESS THAN 500 WATTS MAY HAVE READILY ACCESSIBLE MANUAL ON/OFF SWITCHING INSTEAD.
2. AUTOMATIC TEMPERATURE CONTROLS FOR HVAC SYSTEMS SHALL COMPLY WITH THE FOLLOWING:
   A. EACH ZONE SHALL BE PROVIDED WITH AT LEAST ONE AUTOMATIC TEMPERATURE CONTROL FOR THAT ZONE. EACH FLOOR OF A BUILDING WITH CONDITIONED SPACE SHALL CONTAIN AT LEAST ONE ZONE.
   B. MAINTAIN SPACE TEMPERATURE SET POINTS FROM 55°F TO 85°F.
   C. OPERATE ZONE HEATING AND COOLING IN SEQUENCE IF BOTH ARE PROVIDED.
   D. PROVIDE A TEMPERATURE RANGE ADJUSTABLE UP TO 5°F BETWEEN FULL HEATING AND FULL COOLING TO THE ZONE.
3. A MAINTENANCE LABEL SHALL BE AFFIXED TO MECHANICAL EQUIPMENT AND A MAINTENANCE MANUAL SHALL BE PROVIDED FOR THE OWNERS USE. THE LABEL SHALL CLEARLY INDICATE THE ROUTINE MAINTENANCE ACTIONS WHICH MUST BE PERFORMED TO MAINTAIN THE EQUIPMENT IN EFFICIENT OPERATING CONDITION, OR INDICATE BY NUMBER WHICH MAINTENANCE OR OPERATIONS MANUALS EXPLAIN THE MAINTENANCE REQUIREMENTS IN GREATER DETAIL.
4. ALL EQUIPMENT SHALL COMPLY WITH THE STATE OF CALIFORNIA ENERGY CONSERVATION STANDARDS. EQUIPMENT MANUFACTURER AND SUPPLIER SHALL PROVIDE ALL NECESSARY DATA FOR COMPLIANCE. PROVIDE COMPLIANCE CERTIFICATE WITH EQUIPMENT SUBMITTALS.
5. ALL DUCTWORK, INCLUDING INSULATION SHALL CONFORM TO LATEST CALIFORNIA ADMINISTRATIVE CODE T-24 AND UNIFORM MECHANICAL CODES LATEST ADDITION.
6. DUCTS SUPPORTS AND ANCHORAGE SHALL COMPLY WITH 2022 CMC AND SMACNA. SHOW GAGE, SIZE, AND SPACING OF WIRE HANGERS, STRAPS, ANGLES, CHANNELS, ETC.
7. ALL UNITS SHALL MEET OR EXCEED CEC'S (CALIFORNIA ENERGY COMMISSION) LATEST EER AND COP REQUIREMENTS.
8. BACKDRAFT DAMPERS TO BE INSTALLED ON ALL OUTSIDE AIR INTAKES, EXHAUST OUTLETS AND EXHAUST FANS.
9. CONTRACTOR AT THE TIME OF FINAL INSPECTION SHALL PLACE IN THE BUILDING A MANUAL

LA COUNTY PLAN CHECK NOTES

1. EACH HVAC SYSTEM SHALL BE EQUIPPED WITH AT LEAST ONE AUTOMATIC DEVICE TO SETBACK OR SHUTOFF THE SYSTEM DURING PERIODS OS NON-USE OR ALTERNATE USE OF BUILDING SPACES OR ZONES SERVED BY THE SYSTEM. THERMOSTAT AND TIMER SHALLB READILY ACCESSIBLE AND MANUALLY ADJUSTABLE.
   EXCEPTION: SMALL ANCILLARY HVAC SYSTEM WHOSE INPUT POWER IS LESS THAN 500 WATTS MAY HAVE READILY ACCESSIBLE MANUAL ON/OFF SWITCHING INSTEAD.
2. AUTOMATIC TEMPERATURE CONTROLS FOR HVAC SYSTEMS SHALL COMPLY WITH THE FOLLOWING:
   A. EACH ZONE SHALL BE PROVIDED WITH AT LEAST ONE AUTOMATIC TEMPERATURE CONTROL FOR THAT ZONE. EACH FLOOR OF A BUILDING WITH CONDITIONED SPACE SHALL CONTAIN AT LEAST ONE ZONE.
   B. MAINTAIN SPACE TEMPERATURE SET POINTS FROM 55°F TO 85°F.
   C. OPERATE ZONE HEATING AND COOLING IN SEQUENCE IF BOTH ARE PROVIDED.
   D. PROVIDE A TEMPERATURE RANGE ADJUSTABLE UP TO 5°F BETWEEN FULL HEATING AND FULL COOLING TO THE ZONE.
3. A MAINTENANCE LABEL SHALL BE AFFIXED TO MECHANICAL EQUIPMENT AND A MAINTENANCE MANUAL SHALL BE PROVIDED FOR THE OWNERS USE. THE LABEL SHALL CLEARLY INDICATE THE ROUTINE MAINTENANCE ACTIONS WHICH MUST BE PERFORMED TO MAINTAIN THE EQUIPMENT IN EFFICIENT OPERATING CONDITION, OR INDICATE BY NUMBER WHICH MAINTENANCE OR OPERATIONS MANUALS EXPLAIN THE MAINTENANCE REQUIREMENTS IN GREATER DETAIL.
4. ALL EQUIPMENT SHALL COMPLY WITH THE STATE OF CALIFORNIA ENERGY CONSERVATION STANDARDS. EQUIPMENT MANUFACTURER AND SUPPLIER SHALL PROVIDE ALL NECESSARY DATA FOR COMPLIANCE. PROVIDE COMPLIANCE CERTIFICATE WITH EQUIPMENT SUBMITTALS.
5. ALL DUCTWORK, INCLUDING INSULATION SHALL CONFORM TO LATEST CALIFORNIA ADMINISTRATIVE CODE T-24 AND UNIFORM MECHANICAL CODES LATEST ADDITION.
6. DUCTS SUPPORTS AND ANCHORAGE SHALL COMPLY WITH CHAPTER 6 OF UMC. SHOW GAGE, SIZE, AND SPACING OF WIRE HANGERS, STRAPS, ANGLES, CHANNELS, ETC.
7. ALL UNITS SHALL MEET OR EXCEED CEC'S (CALIFORNIA ENERGY COMMISSION) LATEST EER AND COP REQUIREMENTS.
8. BACKDRAFT DAMPERS TO BE INSTALLED ON ALL OUTSIDE AIR INTAKES, EXHAUST OUTLETS AND EXHAUST FANS.
9. ALL APPLIANCE AND PLUMBING VENTS AND DISCHARGE OUTLET OF EXHAUST FANS SHALL BE AT LEAST 10 FT. IN HORIZONTAL DIRECTION, OR 3 FT. ABOVE THE OUTSIDE-AIR INTAKES FOR HVAC UNITS.
10. ALL HOT WATER PIPING (SUPPLY & RETURN) SHALL BE INSULATED IN ACCORDANCE WITH STATE OF CALIFORNIA ENERGY CONSERVATION STANDARDS.
11. THE PERSON WITH OVERALL RESPONSIBILITY FOR THE CONSTRUCTION OR THE PERSON RESPONSIBLE FOR THE INSTALLATION OF REGULATED MANUFACTURED DEVICES SHALL POST, OR MAKE AVAILABLE WITH THE BUILDING PERMIT(S) FOR MANUFACTURED DEVICES REGULATED BY THE APPLIANCE STANDARDS OR PART 6. SUCH INSTALLATION CERTIFICATE(S) SHALL BE MADE AVAILABLE TO THE ENFORCEMENT AGENCY FOR ALL APPROPRIATE INSPECTIONS. THESE CERTIFICATES SHALL:
    i) IDENTIFY FEATURES REQUIRED TO VERIFY COMPLIANCE WITH THE APPLIANCE STANDARDS AND PART 6;
    ii) INCLUDE A STATEMENT INDICATING THAT THE INSTALLED DEVICES CONFORM TO THE APPLIANCE STANDARDS AND PART 6 AND THE REQUIREMENTS FOR SUCH DEVICES GIVEN IN THE PLANS AND SPECIFICATIONS APPROVED BY THE LOCAL ENFORCEMENT AGENCY;
    iii) STATE THE BUILDING PERMIT NUMBER UNDER WHICH THE CONSTRUCTION OR INSTALLATION WAS PERFORMED.
12. AFTER INSTALLING WALL, CEILING, OR FLOOR INSULATION, THE INSTALLER SHALL MAKE AVAILABLE TO THE ENFORCEMENT AGENCY OR POST IN A CONSPICUOUS LOCATION IN THE BUILDING A CERTIFICATE SIGNED BY THE INSTALLER STATING THAT THE INSTALLATION IS CONSISTENT WITH THE PLANS AND THE REQUIREMENTS OF SECTION 10-103(a) 2-A. OF PART 6. THE CERTIFICATE SHALL ALSO STATE THE MANUFACTURER'S NAME AND MATERIAL IDENTIFICATION AND THE INSTALLED R-VALVE.
13. THE BUILDER SHALL PROVIDE THE BUILDING OWNER OR THE PERSON(S) RESPONSIBLE FOR BUILDING MAINTENANCE (IN CASE OF MULTI-TENANT OR CENTRALLY OPERATED BUILDING) AT OCCUPANCY THE FOLLOWING:
    A) OPERATING INFORMATION. A LIST OF THE HEATING, COOLING, WATER HEATING, AND LIGHTING SYSTEM & FIXTURES, MATERIALS COMPONENTS, AND MECHANICAL DEVICES, CONSERVATION OR SOLAR DEVICES INSTALLED IN THE BUILDING, AND INSTRUCTIONS OR HOW TO USE THEM EFFICIENTLY.
    B) MAINTENANCE INFORMATION. REQUIRED ROUTINE MAINTENANCE ACTION SHALL BE CLEARLY STATED AND INCORPORATED ON A READILY ACCESSIBLE LABEL. THE LABEL MAY BE LIMITED TO IDENTIFYING THE MAINTENANCE MANUAL.
    EXCEPTION: RESIDENTIAL OCCUPANCIES.
    C) VENTILATION INFORMATION. A DESCRIPTION OF THE QUANTITIES OF OUTDOOR AND RECIRCULATED AIR THAT THE VENTILATION SYSTEM IS DESIGNED TO PROVIDE TO EACH AREA.
    EXCEPTION: RESIDENTIAL OCCUPANCIES.
14. JOINTS, PENETRATIONS AND OTHER OPENINGS IN THE BUILDING ENVELOPE THAT ARE POTENTIAL SOURCES OF AIR LEAKAGE SHALL BE CAULKED, GASKETED, WEATHER STRIPPED, OR OTHERWISE SEALED TO LIMIT INFILTRATION AND EXFILTRATION.
15. ALL INSULATING MATERIAL SHALL BE INSTALLED IN COMPLIANCE WITH THE FLAMESPREAD RATING SMOKE DENSITY REQUIREMENTS OF THE CBC.
16. ALL HEATING AND/OR COOLING SYSTEMS SHALL HAVE AN AUTOMATIC THERMOSTAT WITH A CLOCK MECHANISM OR OTHER SETBACK MECHANISM THAT SHUTS THE SYSTEM OFF DURING PERIODS OF NON-USE AND THAT ALLOWS THE BUILDING OCCUPANT TO AUTOMATICALLY SET BACK THE THERMOSTAT SET POINTS FOR AT LEAST 2 PERIODS WITHIN 24 HOURS.
17. THE AIR HANDLING DUCT SYSTEM SHALL BE CONSTRUCTED, INSTALLED, SEALED AND INSULATED AS PROVIDED IN CHAPTER 6 OF THE CALIFORNIA MECHANICAL CODE. (MUST BE INSULATED TO A MINIMUM INSTALLED LEVEL OF R-8, UNLESS DUCTS ARE IN CONDITIONED SPACE.
18. ALL FAN SYSTEMS EXHAUSTING AIR FROM THE BUILDING TO THE OUTSIDE SHALL SHALL BE PROVIDED WITH BACKDRAFT OR AUTOMATIC DAMPERS TO PREVENT AIR LEAKAGE.
19. PIPING, WHETHER BURIED OR UNBURIED, FOR RECIRCULATING SECTIONS OF DOMESTIC HOT WATER SYSTEMS, PIPING FROM THE HEATING SOURCE TO THE STORAGE TANK FOR AN INDIRECT-FIRED DOMESTIC WATER HEATING SYSTEM, COOLING SYSTEM PIPING BELOW 55°F, AND THE FIRST FIVE FEET OF HOT AND AND COLD WATER PIPES FROM THE STORAGE TANK FOR NON-RECIRCULATING SYSTEMS SHALL BE THERMALLY INSULATED IN ACCORDANCE WITH TABLE No. 1-S.
20. INSTALL THERMOSTATS 48" A.F.F.
21. AIR BALANCE CONTRACTOR SHALL SET MINIMUM OUTSIDE AIR FLOW DAMPER AND AIR FLOW MONITORS TO COMPLY WITH MINIMUM OUTSIDE AIR FLOWS INDICATED IN THE TITLE-24 CALCULATIONS.
22. CONDENSATE LINES ARE TERMINATED TO THE SEWER SYSTEM. PLEASE REFER TO PLUMBING PLANS.
23. DUCT SMOKE DETECTORS ARE SHOWN ON SUPPLY AIR DUCTS OF PAC-1, PAC-2 AND MAU-1.
24. SIZING OF THE DUCT SYSTEMS SHOWN SHALL COMPLY WITH ACCA MANUAL Q OR ANOTHER APPROVED METHOD PER SECTION 601.2 OF THE 2007 CALIFORNIA MECHANICAL CODE.
25. THE APPLICANT SHALL FILE ALL CERTIFICATE(S) OF ACCEPTANCE, REQUIRED BY THE MECH-1-C, WITH THE ENFORCEMENT AGENCY PRIOR TO RECEIVING A FINAL OCCUPANCY PERMIT. THE SIGNER(S) SHALL BE ELIGIBLE UNDER DIVISION 3 OF THE BUSINESS AND PROFESSIONS CODE TO SIGN SUCH DOCUMENTS.
25. THE APPLICANT SHALL FILE ALL CERTIFICATE(S) OF ACCEPTANCE, REQUIRED BY THE MECH-1-C, WITH THE ENFORCEMENT AGENCY PRIOR TO RECEIVING A FINAL OCCUPANCY PERMIT. THE SIGNER(S) SHALL BE ELIGIBLE UNDER DIVISION 3 OF THE BUSINESS AND PROFESSIONS CODE TO SIGN SUCH DOCUMENTS.
26. FOR BUILDINGS THAT HAVE USE A COMPLIANCE OPTION THAT REQUIRES FIELD VERIFICATION AND DIAGNOSTIC TESTING, THE BUILDING DEPARTMENT SHALL NOT APPROVE THE BUILDING UNTIL THE BUILDING DEPARTMENT HAS RECEIVED A CERTIFICATE OF FIELD VERIFICATION AND DIAGNOSTIC TESTING THAT HAS BEEN SIGNED AND DATED BY THE HERS RATER.

BUILDING AND SAFETY DIVISION
Department of Public Works
PLAN CHECK
JAMOON
PUBLIC WORKS
04/20/2026 10:58:00 AM
This set of plans and specifications must be kept at the job site at all times, and it is unlawful to make any changes, modifications or alterations to these plans or specifications without the prior written permission of the Building Official. The stamping of this set of plans and specifications SHALL NOT, under any circumstances, be deemed to permit or to be an approval of any work or activity that violates any provisions of any County Ordinance or State Law

BUILDING AND SAFETY DIVISION
Department of Public Works
FIELD COPY
JAMOON
PUBLIC WORKS
04/20/2026 10:56:01 AM
This set of plans and specifications must be kept at the job site at all times, and it is unlawful to make any changes, modifications or alterations to these plans or specifications without the prior written permission of the Building Official. The stamping of this set of plans and specifications SHALL NOT, under any circumstances, be deemed to permit or to be an approval of any work or activity that violates any provisions of any County Ordinance or State Law

LA COUNTY PLAN CHECK NOTES

27. MANUFACTURED FENESTRATION AND EXTERIOR DOORS SHALL MEET ALL LISTED REQUIREMENTS IN SEC 10-111-(A) UNDER SECTION 110.6(A) OF PART 6. TEMPORARY LABELS FOR MANUFACTURED FENESTRATION SHALL HAVE A CLEARLY VISIBLE TEMPORARY LABEL AND SHALL COMPLY WITH LABELING REQUIREMENTS OF NFRC 700. NO OTHER VALUES FOR U-FACTOR, SHGC, VT AND AIR LEAKAGE ARE ALLOWED ON THE TEMPORARY LABEL ATTACHED TO THE MANUFACTURED FENESTRATION PRODUCT OR EXTERIOR DOOR
28. FIELD FABRICATED FENESTRATION AND FIELD FABRICATED EXTERIOR DOORS SHALL BE CAULKED BETWEEN THE FENESTRATION PRODUCTS OR EXTERIOR DOOR AND THE BUILDING, AND SHALL BE WEATHER STRIPPED.
    EXCEPTION: UNFRAMED GLASS DOORS AND FIRE DOORS.
29. ALL INSULATING MATERIAL SHALL BE INSTALLED IN COMPLIANCE WITH THE FLAME SPREAD RATING AND SMOKE DENSITY REQUIREMENTS OF THE CBC.
30. ALL AIR DISTRIBUTION SYSTEM DUCTS AND PLENUMS, INCLUDING BUT NOT LIMITED TO, BUILDING CAVITIES, MECHANICAL CLOSETS, AIR HANDLER BOXES AND SUPPORT, PLATFORMS USED AS DUCTS OR PLENUMS, SHALL BE INSTALLED, SEALED AND INSULATED TO MEET THE REQUIREMENTS OF CHAPTER 6 OF THE CMC. SUPPLY AIR AND RETURN AIR DUCTS CONVEYING HEATED OR COOLED AIR SHALL BE INSULATED TO A MINIMUM INSTALLED LEVEL OF R-8, UNLESS DUCTS ARE IN CONDITIONED SPACE.
31. THE THERMOSTATIC CONTROLS FOR HVAC SYSTEMS SHALL BE CAPABLE OF BEING SET LOCALLY OR REMOTELY BY TO CONTROL COMFORT HEATING DOWN TO 55°F OR LOWER AND COOLING UP TO 85°F OR HIGHER. THE THERMOSTATIC CONTROLS SHALL BE CAPABLE OF PROVIDING A DEAD BAND RANGE OF AT LEAST 5°F WITHIN WHICH HEATING AND COOLING ENERGY TO THE ZONE IS SHUT OFF OR REDUCED TO A MINIMUM.
32. EACH SPACE CONDITIONING SYSTEM SHALL BE INSTALLED WITH CONTROLS THAT COMPLY WITH ITEMS 1 AND 2 BELOW.
    1) ARE CAPABLE OF AUTOMATICALLY SHUTTING OFF THE SYSTEM DURING PERIODS OF NON USE AND SHALL HAVE:
       a) AN AUTOMATIC TIME SWITCH CONTROL DEVICE COMPLYING WITH SEC. 119(c), WITH AN ACCESSIBLE MANUAL OVERRIDE THAT ALLOWS OPERATION OF THE SYSTEM FOR UP TO 4 HOURS; OR
       b) AN OCCUPANCY SENSOR; OR
       c) A FOUR HOUR TIMER THAT CAN BE MANUALLY OPERATED.
       EXCEPTION: MECHANICAL SYSTEMS SERVING RETAIL STORES AND ASSOCIATED MALLS, RESTAURANTS, GROCERY STORES, CHURCHES, AND THEATERS EQUIPPED WITH 7-DAY PROGRAMMABLE TIMERS
    2) AUTOMATICALLY RESTART AND TEMPORARILY OPERATE THE SYSTEM AS REQUIRED TO MAINTAIN:
       a) A SETBACK HEATING THERMOSTAT SETPOINT, IF THE SYSTEM PROVIDES MECHANICAL HEATING; AND
       EXCEPTION: AREA WITH THE DESIGN WINTER OUTDOOR TEMPERATURE OF GREATER THAN 32°F
       b) A SETUP COOLING THERMOSTAT SETPOINT, IF THE SYSTEM PROVIDES MECHANICAL COOLING;
       EXCEPTION: AREA WITH THE DESIGN SUMMER OUTDOOR TEMPERATURE OF LESS THAN 100°F
       EXCEPTION: SYSTEMS SERVING HOTEL/MOTEL GUEST ROOMS, IF THEY HAVE A READILY ACCESSIBLE MANUAL SHUT OFF SWITCH.
33. DEMAND CONTROL VENTILATION DEVICES (CO2 SENSORS) SHALL BE INSTALLED IN ACCORDANCE WITH SEC. 121 (c) 4.
34. THE PIPING FOR ALL SPACE CONDITIONING AND SERVICE WATER HEATING SYSTEMS SHALL BE INSULATED IN ACCORDANCE WITH TABLE 123-A.
35. CIRCULATING SERVICE WATER HEATING SYSTEMS SHALL HAVE A CONTROL CAPABLE OF AUTOMATICALLY TURNING OFF THE CIRCULATING PUMP WHEN HOT WATER IS NOT REQUIRED.
36. CIRCULATING SERVICE WATER HEATING SYSTEMS SHALL HAVE A CONTROL CAPABLE OF AUTOMATICALLY TURNING OFF THE CIRCULATING PUMP WHEN HOT WATER IS NOT REQUIRED.
37. DUCT SYSTEMS USED WITH BLOWER TYPE EQUIPMENT WHICH ARE PORTIONS OF A HEATING, COOLING, ABSORPTION, EVAPORATIVE COOLING OR OUTDOOR AIR VENTILATION SYSTEM SHALL BE SIZED IN ACCORDANCE WITH CHAPTER 17 OF THE 2013 MECHANICAL CODE.
38. ACCESS TO ROOF MOUNTED EQUIPMENT SHALL COMPLY WITH SECTION 904.10.3 OF THE 2013 MECHANICAL CODE.
39. AT THE TIME OF ROUGH INSTALLATION, OR DURING STORAGE AT THE CONSTRUCTION SITE AND UNTIL FINAL START-UP OF THE HEATING, COOLING, AND VENTILATING EQUIPMENT, ALL DUCTS AND OTHER RELATED AIR DISTRIBUTION COMPONENT OPENINGS SHALL BE COVERED WITH TAPE, PLASTIC, SHEET METAL, OR OTHER ACCEPTABLE METHODS TO REDUCE THE AMOUNT OF DUST, WATER, AND DEBRIS WHICH MAY ENTER THE SYSTEM.
40. PRIOR TO PERMIT BEING FINALIZED A COMPLETE REPORT OF THE TESTING A ADJUSTING SHALL BE PROVIDED TO THE OWNER OR OWNER'S REPRESENTATIVE AND FORM 5.140-TESTING AND ADJUSTING SHALL BE COMPLETED AND PROVIDED TO THE INSPECTOR.
41. VIBRATION ISOLATORS INSTALLED BETWEEN MECHANICAL EQUIPMENT AND METAL DUCTS (OR CASING) SHALL BE MADE OF AN APPROVED MATERIALS AND SHALL NOT EXCEED 10 INCHES IN LENGTH. (CMC 602.7)
42. DOMESTIC CLOTHES DRYERS EXHAUST DUCTS SHALL TERMINATE ON THE OUTSIDE OF THE BUILDING AND SHALL BE EQUIPPED WITH BACK-DRAFT DAMPERS. SCREENS SHALL NOT BE INSTALLED A THE DUCT TERMINATION. (CMC 504.3)
43. THE INSTALLED OUTDOOR AIR INTAKES SHALL BE COVERED WITH A SCREEN HAVING NOT LESS THAN 1/4" OPENINGS, AND SHALL HAVE NOT MORE THAN 1/2" OPENINGS. OUTDOOR AIR INTAKES SHALL BE DESIGNED TO PREVENT RAIN INTRUSION AND MANAGE WATER IN ACCORDANCE WITH ASHRAE 62.1 (CMC 402.4)
44. PERMANENT LIGHTING SHALL BE PROVIDED AT THE ROOF ACCESS. THE SWITCH FOR SUCH LIGHTING SHALL BE LOCATED INSIDE THE BUILDING NEAR THE ACCESS MEANS LEADING TO THE ROOF (CMC 304.2.2)
45. PROVIDE AND INSTALL DISCONNECT SWITCH ADJACENT TO AND IN SIGHT FROM MECHANICAL EQUIPMENT SERVED. A 120 VOLTS RECEPTACLE SHALL ALSO BE LOCATED WITHIN 25 FEET OF THE EQUIPMENT FOR SERVICE AND MAINTENANCE PURPOSES (CMC SECTION 303.9.4 & 310.1)
46. EACH HEATING, COOLING, VENTILATION SYSTEM INSTALLED ON THE ROOF OF THE BUILDING SHALL BE PERMANENTLY IDENTIFIED AS TO THE AREA OR SPACE SERVED BY THE EQUIPMENT. (CMC 303.7)
47. APPLIANCES DESIGNED TO BE FIXED IN POSITION SHALL BE SECURELY FASTENED IN PLACE IN ACCORDANCE WITH THE MANUFACTURER'S INSTALLATION INSTRUCTIONS. SUPPORT FOR APPLIANCES SHALL BE DESIGNED AND CONSTRUCTED TO SUSTAIN VERTICAL AND HORIZONTAL LOADS WITHIN THE STRESS LIMITATION SPECIFIED IN THE BUILDING CODE (CMC 303.5)
48. THE INSTALLED MECHANICAL EQUIPMENT AND COMPONENTS SHALL BE ACCESSIBLE FOR PERIODIC SERVICE, REPAIR, AND FUTURE REPLACEMENT WITHOUT REMOVING PERMANENT CONSTRUCTION (CMC 304.1)
49. INSTALLATION OF LISTED EQUIPMENT SHALL BE IN ACCORDANCE WITH THE CONDITIONS OF LISTING. CLEARANCE OF LISTED EQUIPMENT FROM COMBUSTIBLE MATERIALS SHALL BE AS SPECIFIED IN THE LISTING OR ON THE RATING PLATE (CMC 303.2)
50. AIR CONDITIONING REFRIGERATION CIRCUIT ACCESS PORTS LOCATED OUTDOOR SHALL BE PROTECTED FROM UNAUTHORIZED ACCESS WITH LOCKING TYPE TAMPER RESISTANT CAPS OR OTHER ACCEPTABLE MEANS.
    THE HEATING, VENTILATING, AND AIR CONDITIONING SYSTEMS SHALL BE BALANCED IN ACCORDANCE WITH APPROVED METHODS PER CMC, SECTION 317.1.

LA COUNTY PLAN CHECK NOTES

51. THE HEATING, VENTILATING, AND AIR CONDITIONING SYSTEMS SHALL BE BALANCED IN ACCORDANCE WITH APPROVED METHODS PER CMC, SECTION 317.1.
52. DOMESTIC CLOTHES DRYER MOISTURE EXHAUST DUCTS SHALL BE MADE OUT OF SHEET METAL AND SHALL HAVE SMOOTH INTERIOR SURFACE (CMC 504.3.1.1)
53. WHEN THE AUTOMATIC ACTIVATION OF A SMOKE DAMPER OR A COMBINATION SMOKE-FIRE DAMPER OCCURS, THE HVAC SYSTEM SERVING SUCH DAMPER SHALL IMMEDIATELY SHUT DOWN (CMC 605.8)
54. WITHIN 90 DAYS AFTER ISSUANCE OF CERTIFICATE OF OCCUPANCY RECORD DRAWINGS SHALL BE PROVIDED TO THE OWNER. IF A BUILDING DESIGN FEATURE, MATERIAL, COMPONENT OR MANUFACTURED DEVICE IS CHANGED BEFORE FINAL CONSTRUCTION AND INSTALLATION, SUCH THAT THE BUILDING MAY NO LONGER COMPLY WITH PART 6, THE BUILDING MUST BE BROUGHT INTO COMPLIANCE, AND SO INDICATED ON AMENDED PLANS AND CERTIFICATE OF COMPLIANCE(S) THAT SHALL BE SUBMITTED FOR APPROVAL.
55. ALL NEW BUILDING SYSTEMS AND COMPONENTS COVERED BY SECTIONS 110.0, 120.0, 130.0 AND 140.0 SHALL BE INCLUDED IN THE SCOPE OF THE COMMISSIONING REQUIREMENTS IN SECTION 120.8, EXCLUDING COVERED PROCESSES.
56. THE OPAQUE PORTIONS OF FRAMED DEMISING WALLS IN NONRESIDENTIAL BUILDINGS SHALL BE INSULATED WITH AN INSTALLED R-VALUE OF NO LESS THAN R-13 BETWEEN FRAMING MEMBERS.
57. DEMAND CONTROL VENTILATION DEVICES (CO2 SENSORS) SHALL BE INSTALLED IN ACCORDANCE WITH SEC. 120.1 (c) 4.
58. PRIOR TO REHEATING, RECOOLING, OR MIXING AIR, THE CONTROLS IN ZONES WITH DDC MUST REDUCE THE AIR SUPPLY TO A MINIMUM. THE MINIMUM SHALL BE NO GREATER THAN THE LARGEST OF:
    a) 50% OF THE PEAK SUPPLY VOLUME; OR
    b) MINIMUM VENTILATION REQUIREMENTS (SEC 120.1)
59. GARAGE EXHAUST MUST TERMINATE 10 FEET FROM PROPERTY LINE, 3 FEET FROM EXTERIOR WALL OR ROOF, 10 FEET FROM OPENINGS INTO BUILDING, 10 FEET FROM ADJOINING GRADE.
60. NON-CENTRALIZED ENERGY MANAGEMENT SYSTEMS SHALL HAVE SETBACK THERMOSTATS CAPABLE TO PROGRAM TEMPERATURE SETPOINTS FOR AT LEAST FOUR PERIODS WITHIN A 24-HR. PERIOD.
61. DDC SYSTEMS TO THE ZONE LEVEL SHALL BE PROGRAMMED TO ALLOW CENTRALIZED DEMAND SHED FOR NON-CRITICAL ZONES BY HAVING: (1) CONTROLS CAPABLE TO INCREASE COOLING TEMPERATURES BY 4 DEGREES OR MORE IN NON-CRITICAL ZONES WITHIN EMCS; (2) CONTROLS CAPABLE TO DECREASE HEATING TEMPERATURES BY 4 DEGREES OR MORE IN NON-CRITICAL ZONES WITHIN EMCS; (3) CONTROLS THAT REMOTELY RESET TEMPS IN ALL NON-CRITICAL ZONES TO ORIGINAL OPERATING LEVELS; (4) CONTROLS SHALL BE PROGRAMMED TO PROVIDE AN ADJUSTABLE RATE OF CHANGE FOR THE TEMPERATURE INCREASE, DECREASE, AND RESET, AND (5) CONTROLS HAVE THE FEATURES TO BE DISABLED OR ADJUSTED BY AUTHORIZED FACILITY OPERATORS.
62. THE LESSER OF THE MINIMUM RATE OF OUTDOOR AIR REQUIRED BY SEC. 120.1 (C), OR THREE COMPLETE AIR CHANGES SHALL BE SUPPLIED TO THE ENTIRE BUILDING DURING THE ONE-HOUR PERIOD IMMEDIATELY BEFORE THE BUILDING IS NORMALLY OCCUPIED.
63. ALL MECHANICAL VENTILATION AND SPACE-CONDITIONING SYSTEMS SHALL BE DESIGNED WITH DUCTWORK, DAMPERS, AND CONTROLS WHICH ALLOWS OUTSIDE AIR RATES TO BE OPERATED AT THE LARGER OF (1) THE MINIMUM LEVELS SPECIFIED IN SECTION 120.1(C)3 OR (2) THE RATE REQUIRED FOR MAKE-UP OF EXHAUST SYSTEMS THAT ARE REQUIRED FOR AN EXEMPT OR COVERED PROCESS, FOR CONTROL OF ODORS, OR FOR THE REMOVAL OF CONTAMINANTS WITHIN THE SPACE. MEASURED OUTSIDE AIR RATES OF CONSTANT AND VARIABLE VOLUME MECHANICAL VENTILATION SYSTEMS SHALL BE WITHIN 10% OF OUTSIDE AIR RATE SHOWN ON TABLE 120.1-A.
64. HOTEL/MOTEL GUEST ROOM THERMOSTATS SHALL HAVE NUMERIC TEMPERATURE SET POINTS IN °F AND °C; AND SET POINT STOPS ACCESSIBLE ONLY TO AUTHORIZED PERSONNEL SUCH THAT GUEST ROOM OCCUPANTS CANNOT ADJUST THE SETPOINT MORE THAN ±5°F (±3°C).
65. THE THERMOSTATIC CONTROLS FOR HVAC SYSTEMS SHALL BE CAPABLE OF BEING SET LOCALLY OR REMOTELY BY TO CONTROL COMFORT HEATING DOWN TO 55°F OR LOWER AND COOLING UP TO 85°F OR HIGHER. THE THERMOSTATIC CONTROLS SHALL BE CAPABLE OF PROVIDING A DEAD BAND RANGE OF AT LEAST 5°F WITHIN WHICH HEATING AND COOLING ENERGY TO THE ZONE IS SHUT OFF OR REDUCED TO A MINIMUM.
66. OUTDOOR AIR SUPPLY AND EXHAUST EQUIPMENT SHALL BE INSTALLED WITH DAMPERS THAT AUTOMATICALLY CLOSE UPON FAN SHUTDOWN.
67. SPACE CONDITIONING SYSTEMS WITH DDC ZONE CONTROLS SHALL HAVE OPTIMUM START/STOP CONTROLS. MINIMUM CONTROLS SHALL BE A FUNCTION THE DIFFERENCE(S) BETWEEN SPACE TEMPERATURE(S) AND OCCUPIED SET POINT(S), THE OUTDOOR AIR TEMPERATURE(S), AND THE AMOUNT OF TIME PRIOR TO SCHEDULED OCCUPANCY.
68. AIR DISTRIBUTION SYSTEM DUCTS AND PLENUMS, INCLUDING, BUT NOT LIMITED TO, BUILDING CAVITIES, MECHANICAL CLOSETS, AIR-HANDLER BOXES AND SUPPORT PLATFORMS USED AS DUCTS OR PLENUMS, SHALL BE INSTALLED, SEALED AND INSULATED TO MEET THE REQUIREMENTS OF CHAPTER 6 CMC CODE AND ANSI/SMACNA -006-2006 HVAC DUCT CONSTRUCTION STANDARDS METAL AND FLEXIBLE. SUPPLY-AIR DUCTS CONVEYING HEATED OR COOLED AIR SHALL BE INSULATED TO A MINIMUM INSTALLED LEVEL OF R-4.2 (R-8 IN UNCONDITIONED SPACE), UNLESS DUCTS ARE IN CONDITIONED SPACE.
69. MAXIMUM LENGTH OF FLEXIBLE DUCT AND CONNECTORS SHALL NOT BE MORE THAN 5 FEET. FLEXIBLE DUCTS SHALL NOT BE USED IN LIEU OF RIGID ELBOWS.
70. EACH SPACE-CONDITIONING SYSTEM SHALL BE INSTALLED WITH CONTROLS (1) CAPABLE OF AUTOMATICALLY SHUTTING OFF THE SYSTEM DURING PERIODS OF NON-USE AND SHALL HAVE (A) 4-HR TIMER OR; (B) OCCUPANCY SENSORS OR; (C) AUTO TIME SWITCH CONTROLS AND ACCESSIBLE MANUAL OVERRIDE FOR UP TO 4-HRS. (2) AUTOMATICALLY RESTART AND TEMPORARILY OPERATE THE SYSTEM TO MAINTAIN SETBACK THERMOSTAT SETPOINTS FOR MECHANICAL HEATING AND COOLING. (3) MULTIPURPOSE, CLASSROOMS CONFERENCE, CONVENTION, AUDITORIUM AND MEETING CENTER ROOMS OF CERTAIN SIZE WHICH DO NOT HAVE PROCESSES OR OPERATIONS THAT GENERATE DUSTS, FUMES, VAPORS OR GASSES SHALL BE EQUIPPED WITH OCCUPANT SENSOR(S) TO ACCOMPLISH THE FOLLOWING DURING UNOCCUPIED PERIODS (A) AUTOMATICALLY SETUP THE OPERATING COOLING TEMPERATURE SET POINT BY 2°F OR MORE AND SETBACK THE OPERATING HEATING TEMPERATURE SET POINT BY 2°F OR MORE AND; (B) AUTOMATICALLY RESET THE MINIMUM REQUIRED VENTILATION RATE WITH AN OCCUPANT SENSOR VENTILATION CONTROL DEVICE ACCORDING TO SECTION 120.1(C)5. (4) HOTEL AND MOTEL GUEST ROOMS SHALL HAVE CAPTIVE CARD KEY CONTROLS, OCCUPANCY SENSING CONTROLS, OR AUTOMATIC CONTROLS SUCH THAT, NO LONGER THAN 30 MINUTES AFTER THE GUEST ROOM HAS BEEN VACATED, SETPOINTS ARE SETUP AT LEAST +5°F (+3°C) IN COOLING MODE AND SET-DOWN AT LEAST -5°F (-3°C) IN HEATING MODE.
71. EACH FAN OR FAN ARRAY WITH A COMBINED MOTOR NAMEPLATE HORSEPOWER GREATER THAN 1.00 HP OR WITH A COMBINED FAN NAMEPLATE ELECTRICAL INPUT POWER GREATER THAN 0.89 KW SHALL HAVE A FAN ENERGY INDEX (FEI) OF 1.00 OR HIGHER AT FAN SYSTEM DESIGN CONDITIONS. EACH FAN AND FAN ARRAY USED FOR A VARIABLE-AIR-VOLUME SYSTEM THAT MEETS THE REQUIREMENTS OF SECTION 140.4(C)2 SHALL HAVE AN FEI OF 0.95 OR HIGHER AT FAN SYSTEM DESIGN CONDITIONS. SHOW COMPLIANCE ON TITLE 24 FORMS.
72. FOR EACH FAN SYSTEM THAT INCLUDES AT LEAST ONE FAN OR FAN ARRAY WITH FAN ELECTRICAL INPUT POWER ≥ 1 KW, FAN SYSTEM ELECTRICAL INPUT POWER DETERMINED PER SECTION 140.4(C)1(B) AT THE FAN SYSTEM DESIGN AIRFLOW SHALL NOT EXCEED FAN KW BUDGET AS CALCULATED PER SECTION 140.4(C)1(A). SHOW COMPLIANCE ON TITLE 24 FORMS.
73. INDICATE THE FOLLOWING NOTE ON PLANS: DUCT SYSTEMS USED WITH BLOWER TYPE EQUIPMENT WHICH ARE PORTIONS OF A HEATING, COOLING, ABSORPTION, EVAPORATIVE COOLING OR OUTDOOR AIR VENTILATION SYSTEM SHALL BE SIZED IN ACCORDANCE WITH CHAPTER 17 OF THE CALIFORNIA MECHANICAL CODE.
74. DEDICATED OUTDOOR AIR SYSTEM (DOAS) UNIT TO CONDITION, TEMPER OR FILTER 100 PERCENT OUTDOOR AIR SEPARATE FROM LOCAL OR CENTRAL SPACE-CONDITIONING SYSTEMS SERVING THE SAME SPACE SHALL COMPLY WITH THE FOLLOWING: (A) FAN SYSTEMS WITH A TOTAL FAN POWER GREATER THAN OR EQUAL TO 1 KW SHALL BE IN ACCORDANCE WITH SECTION 140.4(C); (B) THE DOAS SUPPLY AIR SHALL BE DELIVERED DIRECTLY TO THE OCCUPIED SPACE OR AT THE OUTLET OF ANY TERMINAL HEATING OR COOLING COILS AND SHALL CYCLE OFF ANY ZONE HEATING AND COOLING EQUIPMENT FANS, CIRCULATION PUMPS AND TERMINAL UNIT FANS WHEN THERE IS NO CALL FOR HEATING OR COOLING IN THE ZONE; (C) DOAS SUPPLY AND EXHAUST FANS SHALL HAVE A MINIMUM OF THREE SPEEDS TO FACILITATE SYSTEM BALANCING; (D) DOAS WITH MECHANICAL COOLING PROVIDING VENTILATION TO MULTIPLE ZONES AND OPERATING IN CONJUNCTION WITH ZONE HEATING AND COOLING SYSTEMS SHALL NOT USE HEATING OR HEAT RECOVERY TO WARM SUPPLY AIR ABOVE 60°F WHEN REPRESENTATIVE BUILDING LOADS OR OUTDOOR AIR TEMPERATURE INDICATES THAT THE MAJORITY OF ZONES REQUIRE COOLING.
75. PROVIDE A CONTROL NOTE TO PROVIDE SHUTDOWN OF HVAC SYSTEM SERVING SMOKE DAMPERS OR COMBINATION SMOKE-FIRE DAMPERS WHEN AUTOMATIC ACTIVATION OF DAMPER OCCURS. (SFM)
    EXCEPTION: HVAC SYSTEMS SERVING A SMOKE EVACUATION SYSTEM OR AN ENCLOSED SPACE HAVING A COMMON ATMOSPHERE WHERE OPENINGS ARE REQUIRED TO BE PROTECTED. SEC 606.8

LA COUNTY PLAN CHECK NOTES

76. NOTE: DUCTS, PLENUMS, OR FITTINGS OF METAL SHALL COMPLY WITH SMACNA DUCT CONSTRUCTION STANDARDS - METAL AND FLEXIBLE. SEC 602.3
77. NOTE: DUCTWORK SHALL BE LEAK-TESTED IN ACCORDANCE WITH SMACNA HVAC AIR DUCT LEAKAGE TEST MANUAL. S

MITSUBISHI/TRANE VRF OUTDOOR UNIT SCHEDULES (SIMULTANEOUS HEATING & COOLING OUTDOOR UNITS)

SYMBOL	LOCATION	MANUFACTURER AND MODEL CAPACITY (TONS)	MODULES	COOLING CAPACITY (BTUH) SENSIBLE	COOLING CAPACITY (BTUH) TOTAL	AMBIENT TEMP. (°F)	HEATING 37.8 (°F) AMBIENT	ELECTRICAL EER	COP	IEER	V- Ø-HZ	MCA	MOCP	INDOOR UNIT	OPER. WEIGHT (LBS)	VIBRATION ISOLATORS VIBREX TYPE	DEFLECTION (IN)
OU 1	ROOF SEE PLAN	MITSUBISHI PURY-EM120TXU-A 10 TON	-	100,000	120,000	105	135,000	12.7	3.73	23.10	208/230-3Ø-60	51	80	FC-1-12, FC -TR	850	"RMUAB-EQ-SH" W/BASERAIL	2"
OU 2	ROOF SEE PLAN	MITSUBISHI PURY-EM120TXU-A 10 TON	-	100,000	120,000	105	135,000	12.7	3.73	23.10	208/230-3Ø-60	51	80	FC-13-17	850	"RMUAB-EQ-SH" W/BASERAIL	2"

REMARKS

NOTE: ALL UNITS SHALL COMPLY WITH THE FOLLOWING REQUIREMENTS;

1. ALL UNITS SHALL BE SUPPLIED WITH THE FOLLOWING INTEGRAL ACCESSORIES, HIGH PRESSURE SWITCH, SUCTION ACCUMULATOR, LOW PRESSURE SWITCH, SOLID VALVES, TIME DELAY, COMPRESSOR SHORT CYCLE PROTECTOR, VARIABLE SPEED INVENTER, R-32 REFRIGERANT, INTEGRAL A2L LEAK DETECTION AND PURGE CONTROL SYSTEM TO COMPLY WITH ASHRAE 15-2024 SECTION 7.3.4.4. PROVIDE CONDENSATE DRAIN PAN AND PIPED TO A FLOOR DRAIN.
2. ALL OUTDOOR UNITS SHALL BE LISTED AS ENERGY STAR APPROVED EQUIPMENT.
3. REFRIGERANT PIPING BETWEEN THE OUTDOOR UNIT AND INDOOR UNIT SHALL BE ROUTED IN THE FIELD. THE EXACT ROUTING SHALL BE APPROVED BY THE ARCHITECT AND STRUCTURAL ENGINEER. UNDERGROUND REFRIGERANT PIPE SHALL RUN INSIDE 4" ABS PIPES FOLLOW MANUFACTURER'S RECOMMENDATIONS.
4. PROVIDE SEPARATE ELECTRICAL CONNECTION FOR EACH MODULE.
5. SUCTION AND LIQUID PIPE SIZES SHALL BE PER MANUFACTURER'S RECOMMENDATIONS BASED ON TOTAL DEVELOPED LENGTH AND CHANGE IN ELEVATION BETWEEN INDOOR UNIT AND OUTDOOR UNIT. MAXIMUM OF 1312FT TOTAL REFRIGERANT LINE LENGTH ONE WAY. PROVIDE ELASTOMERIC INSULATION AROUND EACH REFRIGERANT PIPE SEPARATELY. REFRIGERANT PIPES EXPOSED TO WEATHER SHALL BE PROVIDED WITH ALUMINUM CLADDING JACKET AROUND INSULATION. THE INSULATION SHALL BE ARMACELL: AP ARMAFLEX, THICKNESS SHALL BE PER TITLE-24 REQUIREMENTS.
6. PROVIDE 2, 16 GAUGE SHIELDED COMMUNICATION WIRES. (REFER TO WIRING DRAWINGS). INSTALL CONTROL WIRING IN SEPARATE CONDUITS.
7. OUTDOOR UNIT TO BE PROVIDED WITH M.W. SAUSSE OSHPD PRE-APPROVED BASERAIL WITH VIBRATION ISOLATOR. 2" DEFLECTION
8. THE COILS SHALL BE COATED FOR SEACOST BY THE FACTORY.
9. PROVIDE ONE 12 PORT MAIN BC SEE BC CONTROLLER SCHEDULES THIS SHEET.
10. CONTRACTOR SHALL BE MITSUBISHI ELECTRIC CITY MULTI CERTIFIED.
11. PROVIDE VRF CENTRAL CONTROLLER (AE-200A) WITH BUILT-IN BTL CERTIFIED BACNET GATEWAY AND LICENSE.
12. ALL REFRIGERATION SYSTEMS SHALL BE INSTALLED IN ACCORDANCE WITH THE MANUFACTURER'S INSTALLATION INSTRUCTIONS.
13. ALL REFRIGERANT PIPING, FITTINGS, AND VALVES SHALL BE LISTED OR DEMONSTRATE COMPLIANCE WITH THE REQUIREMENT IN ASHRAE 15-2022 : SEC. 9.10

MITSUBISHI/TRANE FAN COIL UNIT SCHEDULES OU-1/BC-1

SYMBOL	LOCATION	AREA SERVED	MANUFACTURER & MODEL NO.	TYPE	FAN CFM	FAN E.S.P. (" W.G.)	MOTORS BHP	FLA	MCA	MOCP	V	ø	HZ	FILTERS NO.	SIZE	COIL CAPACITY COOLING @95°F OSA SENS. CAPACITY (BTUH)	TOTAL CAPACITY (BTUH)	HEATING CAPACITY @41°F TOTAL CAPACITY (MBH)	WEIGHT (LBS.)	OUTSIDE AIR CFM	SOUND PRESSURE (dBA)
FC 1	DORM 3 CEILING	DORM 3	MITSUBISHI PLFY-M05NFMU-A	22"X22" 4-WAY CEILING CASSETTE	280	-	0.125	0.8	3.0	15	208	1	60	1	1"	4,800	6,000	5,600	35	-	38
FC 2	DORM 4 CEILING	DORM 4	MITSUBISHI PLFY-M05NFMU-A	22"X22" 4-WAY CEILING CASSETTE	280	-	0.125	0.8	3.0	15	208	1	60	1	1"	4,800	6,000	5,600	35	-	38
FC 3	DORM 5 CEILING	DORM 5	MITSUBISHI PLFY-M05NFMU-A	22"X22" 4-WAY CEILING CASSETTE	280	-	0.125	0.8	3.0	15	208	1	60	1	1"	4,800	6,000	5,600	35	-	38
FC 4	DORM 6 CEILING	DORM 6	MITSUBISHI PLFY-M05NFMU-A	22"X22" 4-WAY CEILING CASSETTE	280	-	0.125	0.8	3.0	15	208	1	60	1	1"	4,800	6,000	5,600	35	-	38
FC 5	DORM 7 CEILING	DORM 7	MITSUBISHI PLFY-M05NFMU-A	22"X22" 4-WAY CEILING CASSETTE	280	-	0.125	0.8	3.0	15	208	1	60	1	1"	4,800	6,000	5,600	35	-	38
FC 6	DORM 8 CEILING	DORM 8	MITSUBISHI PLFY-M05NFMU-A	22"X22" 4-WAY CEILING CASSETTE	280	-	0.125	0.8	3.0	15	208	1	60	1	1"	4,800	6,000	5,600	35	-	38
FC 7	DORM 9 CEILING	DORM 9	MITSUBISHI PLFY-M05NFMU-A	22"X22" 4-WAY CEILING CASSETTE	280	-	0.125	0.8	3.0	15	208	1	60	1	1"	4,800	6,000	5,600	35	-	38
FC 8	DORM 10 CEILING	DORM 10	MITSUBISHI PLFY-M05NFMU-A	22"X22" 4-WAY CEILING CASSETTE	280	-	0.125	0.8	3.0	15	208	1	60	1	1"	4,800	6,000	5,600	35	-	38
FC 9	DORM 1 CEILING	DORM 1	MITSUBISHI PLFY-M05NFMU-A	22"X22" 4-WAY CEILING CASSETTE	280	-	0.125	0.8	3.0	15	208	1	60	1	1"	4,800	6,000	5,600	35	-	38
FC 10	DORM 2 CEILING	DORM 2	MITSUBISHI PLFY-M05NFMU-A	22"X22" 4-WAY CEILING CASSETTE	280	-	0.125	0.8	3.0	15	208	1	60	1	1"	4,800	6,000	5,600	35	-	38
FC 11	EXERCISE RM. CEILING	DORM HALLWAY/BATH RM./ PARAMEDIC SUPPLY/JAN. STORAGE/PASSAGE	MITSUBISHI PVFY-M36NAMU-A	MULTI-POSITION (HORIZONTAL MOUNTED)	1,095	0.5	0.282	3.0	4.1	15	208	1	60	1	1"	26,056	36,000	40,000	175	-	43
FC 12	EXERCISE RM. CEILING	EXERCISE ROOM	MITSUBISHI PEFY-M24NMAU-A	HORIZONTAL TYPE	735	0.5	0.207	1.6	3.0	15	208	1	60	1	1"	17,330	24,000	27,000	150	-	38
FC 1R	TELECOM RM. CEILING	TELECOM ROOM	MITSUBISHI PMFY-M12NCMU-A	1-WAY CEILING CASSETTE	328	-	0.027	0.28	.35	15	208	1	60	1	1"	8,600	12,000	13,500	40	-	39

NOTE: ALL UNITS SHALL COMPLY WITH THE FOLLOWING REQUIREMENTS;

1. ALL UNITS SHALL BE SUPPLIED WITH THE FOLLOWING ACCESSORIES, LEV REFRIGERANT CONTROL DEVICE, 4 SPEED FAN CONTROL, HEAT PUMP ASSEMBLY DX COIL, MERV-13 FILTER, R-32 REFRIGERANT. PROVIDE INTEGRAL A2L LEAK DETECTION AND PURGE CONTROL SYSTEM.
2. EACH FAN COIL SHALL BE SUPPLIED WITH SEPARATELY MITSUBISHI ELECTRIC THERMOSTAT ADAPTOR MODEL NO. PAC-US444CN-1 AND PROVIDE RESIDIO HONEYWELL WI-FI 8000 TH8321WF1001 THERMOSTAT. PROVIDE 208/230V-24VTRANSFORMER FOR EACH THERMOSTAT. WIRE SHALL BE INTEGRAL WITH EACH THERMOSTAT.
3. UNIT SHALL BE SUPPLIED WITH ALUMINUM FINS AND COPPER TUBES.
4. REFRIGERANT PIPING BETWEEN THE HEAT PUMP OUTDOOR UNIT AND FAN COIL SHALL BE ROUTED IN THE FIELD. THE EXACT ROUTING SHALL BE APPROVED BY THE ARCHITECT AND STRUCTURAL ENGINEER.
5. SUCTION AND LIQUID PIPE SIZES SHALL BE PER MANUFACTURER'S RECOMMENDATIONS BASED ON TOTAL DEVELOPED LENGTH AND CHANGE IN ELEVATION BETWEEN FAN COIL AND HEATPUMP OUTDOOR UNIT. SUCTION AND LIQUID PIPES MUST BE INSULATED SEPARATELY.
6. CONTRACTOR SHALL BE MITSUBISHI ELECTRIC CITY MULTI CERTIFIED.
7. FANCOIL TO BE PROVIDED WITH FACTORY SUPPLIED CONDENSATE PUMPS. MODEL # SI1730-230.
8. ALL FANCOILS DIP SWITCHES SHALL BE SET TO 208V AND THE W.G. SHOWN ON THE SCHEDULE BELOW THE CFM VALUES.
9. ALL FAN COILS TO BE PROVIDED WITH FACORY SUPPLIED CONDENSATE OVERFLOW SWITCH.
10. ALL VERTICAL FAN COILS TO BE PROVIDED WITH 2" FIELD FABRICATED SLIDABLE FILTER RACK MANUFACTURED THAT CAN ACCOMMODATE MERV-13 2" THICK FILTER.
11. ALL HORIZONTAL FAN COILS TO BE PROVIDED WITH FACTORY SUPPLIED FBM-2 SERIES FILTER BOXES WITH MERV-13 2" FILTERS.
12. SUCTION AND LIQUID PIPE SIZES SHALL BE PER MANUFACTURER'S RECOMMENDATIONS BASED ON TOTAL DEVELOPED LENGTH AND CHANGE IN ELEVATION BETWEEN INDOOR UNIT AND BC CONTROLLER. PROVIDE ELASTOMERIC INSULATION AROUND EACH REFRIGERANT PIPE SEPARATELY. REFRIGERANT PIPES EXPOSED TO WEATHER SHALL BE PROVIDED WITH ALUMINUM CLADDING JACKET AROUND INSULATION. THE INSULATION SHALL BE ARMACELL: AP ARMAFLEX, THICKNESS SHALL BE PER TITLE-24 REQUIREMENTS. (PIPING SHALL NOT BE RUN THRU THE CORRIDORS)
12. ALL REFRIGERATION SYSTEMS SHALL BE INSTALLED IN ACCORDANCE WITH THE MANUFACTURER'S INSTALLATION INSTRUCTIONS.
13. ALL REFRIGERANT PIPING, FITTINGS, AND VALVES SHALL BE LISTED OR DEMONSTRATE COMPLIANCE WITH THE REQUIREMENT IN ASHRAE 15-2022 : SEC. 9.10.

FC 1 — FAN COIL UNIT (INDOOR SECTION)
FC NUMBER

MITSUBISHI/TRANE FAN COIL UNIT SCHEDULES OU-2/BC-2

SYMBOL	LOCATION	AREA SERVED	MANUFACTURER & MODEL NO.	TYPE	FAN CFM	FAN E.S.P. (" W.G.)	MOTORS BHP	FLA	MCA	MOCP	V	ø	HZ	FILTERS NO.	SIZE	COIL CAPACITY COOLING @95°F OSA SENS. CAPACITY (BTUH)	TOTAL CAPACITY (BTUH)	HEATING CAPACITY @41°F TOTAL CAPACITY (MBH)	WEIGHT (LBS.)	OUTSIDE AIR CFM	SOUND PRESSURE (dBA)
FC 13	HALLWAY CEILING	LOBBY	MITSUBISHI PEFY-M18NMAU-A	HORIZONTAL TYPE	585	0.5	0.224	1.2	3.0	15	208	1	60	1	2"	13,728	18,000	20,000	150	-	36
FC 14	COPY ROOM CEILING	STATION OFFICE	MITSUBISHI PVFY-M18NAMU-A	MULTI-POSITION (HORIZONTAL MOUNTED)	585	0.5	0.224	1.2	3.0	15	208	1	60	1	2"	13,728	18,000	20,000	150	-	36
FC 15	WORK ROOM CEILING	WORK RM./ CENTRAL STORAGE UTIL. SVC/SINK RM./ COPY RM./OFFICE HALLWAY	MITSUBISHI PEFY-M24NMAU-A	HORIZONTAL TYPE	883	0.6	0.075	1.31	2.73	15	208	1	60	1	2"	19,246	24,000	27,000	75	-	34
FC 16	DAY ROOM CEILING	DAY ROOM	MITSUBISHI PEFY-M36NMAU-A	HORIZONTAL TYPE	1,077 (MED)	0.6	0.193	1.5	3.50	15	208	1	60	1	2"	21,631	30,000	34,000	100	-	39
FC 17	DAY ROOM CEILING	KITCHEN	MITSUBISHI PEFY-M36NMAU-A	HORIZONTAL TYPE	1,077 (MED)	0.6	0.193	1.5	3.50	15	208	1	60	1	2"	21,631	30,000	34,000	100	-	39

MITSUBISHI/TRANE(BC) BRANCH CONTROLLER BOX

SYMBOL	LOCATION	MANUFACTURER AND MODEL	PORTS	ELECTRICAL V- Ø-HZ	MCA	AMPS	WEIGHT (LBS)
BC 1	HOUSE/JA. STORAGE	MITSUBISHI CMB-P1016NU-JA2	16	208-1Ø-60	1.6	20A	150
BC 2	UTILITY ROOM	MITSUBISHI CMB-P108NU-J2	8	208-1Ø-60	0.7	20A	150

1. PROVIDE ISOLATION BALL VALVE FOR EACH OF THE PORTS RATED TO 700PSIG, FULL PORT R410A RATED.
2. MAXIMUM CONNECTED ALL BRANCHES SHOULD BE A MAXIMUM OF 189,00 BTUH FOR SINGLE BC'S AND 126,000 BTUH FOR SUB BC.

BUILDING AND SAFETY DIVISION
Department of Public Works
FINAL ENERGY APPROVED
UNDER CGR TITLE 24, PART 1, ARTICLE 1 & PART 6
JMoon
PUBLIC WORKS
04/20/2026 10:58:01 AM
This set of plans and specifications must be kept at the job site at all times, and it is unlawful to make any changes, modifications or additions to these plans or specifications without the prior written permission of the Building Official. The stamping of this set of plans and specifications SHALL NOT, under any circumstances, be deemed to permit or to be an approval of any work or activity that violates any provisions of any County Ordinance or State Law

BUILDING AND SAFETY DIVISION
Department of Public Works
APPROVED
UNDER LOS ANGELES COUNTY CODE TITLE 29
JMoon
PUBLIC WORKS
04/20/2026 10:56:01 AM
This set of plans and specifications must be kept at the job site at all times, and it is unlawful to make any changes, modifications or additions to these plans or specifications without the prior written permission of the Building Official. The stamping of this set of plans and specifications SHALL NOT, under any circumstances, be deemed to permit or to be an approval of any work or activity that violates any provisions of any County Ordinance or State Law

WILLIAM LOYD JONES ARCHITECT
9415 culver boulevard
culver city, california
9 0 2 3 2
TEL 310 392 3995

ADDENDUM# 3 - BID SET - APRIL 30, 2026

KHALIFEH & ASSOCIATES
CONSULTING ENGINEERS
1625 W. OLYMPIC BLVD. #791, LOS ANGELES, CA 90
Tel: (310) 305-1555 Fax: (310) 305-1550
www.KhalifehAssociates.com
252671

REGISTERED PROFESSIONAL ENGINEER JACK Y. KHALIFEH No. M025454 Exp. SEPT. 2026 STATE OF CALIFORNIA

MECHANICAL EQUIPMENT SCHEDULES

FIRE STATION 46
COUNTY OF LOS ANGELES FIRE DEPARTMENT
26720 BOMBERO LANE
VALENCIA, CALIFORNIA

FIVEPOINT Developer

Issue	
LACoFD APPROVED	11.MAR.25
100% DD SET	17.APR.2
FIRE DEPARTMENT SUBMITTAL SET	20.MAY.25
PLAN CHECK SUBMITTAL SET	13.AUG.2
PLAN CHECK RESUBMITTAL SET	07.NOV.25
PLAN CHECK RESUBMITTAL SET	17.DEC.25

THE ABOVE DRAWINGS AND SPECIFICATIONS AND SEALS, DESIGNS AND INFORMATION THEREIN ARE THE PROPERTY OF THE ARCHITECT. THE PROPERTY OF THE ARCHITECT, AND NO PART THEREOF SHALL BE COPIED, DISCLOSED TO OTHERS OR USED IN CONNECTION WITH ANY WORK OR PROJECT OTHER THAN THE PROJECT FOR WHICH THE DRAWINGS WERE PREPARED, AND NO OTHER METHOD THE WRITTEN CONSENT OF THE ARCHITECT. CONTACT WITH THESE DRAWINGS OR SPECIFICATIONS SHALL CONSTITUTE CONCLUSIVE EVIDENCE OF ACCEPTANCE OF THESE RESTRICTIONS.

WRITTEN DIMENSIONS ON THESE DRAWINGS SHALL HAVE PRECEDENCE OVER SCALED DIMENSIONS. CONTRACTORS SHALL VERIFY AND BE RESPONSIBLE FOR ALL DIMENSIONS AND CONDITIONS ON THE JOB AND THIS OFFICE MUST BE NOTIFIED OF ANY VARIATION FROM THE DIMENSIONS AND CONDITIONS SHOWN BY THESE DRAWINGS. SHOP DETAILS MUST BE SUBMITTED TO THIS OFFICE FOR APPROVAL BEFORE PROCEEDING WITH FABRICATION.

Copyright 2005

Date	17.DEC.25
Drawn	BDL
Checked	JK
Scale	NTS
Job. No.	

M0.2

Plot date : 2026-03-18

EXHAUST FANS SCHEDULE

SYMBOL	MAKE	MODEL	AREA SERVED	CFM MIN	CFM MAX	S.P (IN.WG)	ELECTRICAL WATTS (HP)	ELECTRICAL V	ELECTRICAL PH	ELECTRICAL HZ	SONES	WT. (LBS)	ACCESSORIES	REMARKS
EF 1	PANASONIC	FV-05-11VKS3 (CEILING MOUNTED)	BATHRM	50	80	0.25	5.1 W	120	1	60	0.3	15	1 3 5 7	4 10
EF 2	PANASONIC	FV-05-11VKS3 (CEILING MOUNTED)	ADA BATHRM	50	80	0.25	5.1 W	120	1	60	0.3	15	1 3 5 7	4 10
EF 3	PANASONIC	FV-05-11VKS3 (CEILING MOUNTED)	ADA BATHRM	50	80	0.25	5.1 W	120	1	60	0.3	15	1 3 5 7	4 10
EF 4	PANASONIC	FV-05-11VKS3 (CEILING MOUNTED)	BATHRM	50	80	0.25	5.1 W	120	1	60	0.3	15	1 3 5 7	4 10
EF 5	PANASONIC	FV-20VQ3 (CEILING MOUNTED)	HOUSE JANITOR/ STORAGE		150	0.20	42 W	120	1	60	1.0	15	1 3	4
EF 6	LOREN COOK	ACE-B 100C2B (ROOF MOUNTED)	TURNOUT STORAGE ROOM		400	0.25	1/6	120	1	60	4.0	30	4 8	3
EF 7	PANASONIC	FV-40VQ4 (CEILING MOUNTED)	ELECTRICAL ROOM		300	0.22	110 W	120	1	60	3.0	40	8 9	7
EF 8	LOREN COOK	ACE-B 100C2B (ROOF MOUNTED)	EXERCISE ROOM		600	0.3	1/6	120	1	60	7.2	100	2 4 8	5
EF 9	LOREN COOK	135SQI-HP (IN-LINE MOUNTED)	OIL ROOM		400	0.25	1/4	120	1	60	6.0	165	6 9	4
EF 10	PANASONIC	FV-30VQ3 (CEILING MOUNTED)	AIR FILL ROOM		250	0.25	62 W	120	1	60	1.0	40	8 9	4
EF 11	PANASONIC	FV-05-11VKS3 (CEILING MOUNTED)	REST RM.	50	80	0.25	5.1 W	120	1	60	0.3	15	1 3 5 7	4 10
EF 12	PANASONIC	FV-0511VQ1 (CEILING MOUNTED)	COPY ROOM		80	0.375	14.5 W	120	1	60	NA	15	1 3	5
EF 13	PANASONIC	FV-11-15VK2 (CEILING MOUNTED)	UTILITY/SERVICE		150	0.25	22 W	120	1	60	0.7	15	1 3	4
EF 14	PANASONIC	FV-05-11VKS3 (CEILING MOUNTED)	BATHRM	50	80	0.25	5.1 W	120	1	60	0.3	15	1 3 5 7	4 10
EF 15	LOREN COOK	ACE-B 120ACEB (ROOF MOUNTED)	WORK RM.		215	0.25	1/6 HP	120	1	60	3.2	60	4 8	4
EF HR	PANASONIC	FV-11-15VK1 (CEILING MOUNTED)	HOSE ROOM	150		0.1	9.8 W	120	1	60	0.3	15	1 3 5 7 10	10
EF RA	LOREN COOK	GN-1000 (IN-LINE MOUNTED)	RESERVE APPARATUS	1,700		0.3	0.5 HP	120	1	60	3.5	90	8 9	4

ACCESSORIES:

1 ROOF CAP 2 FAN SPEED CONTROL 3 ALUMINUM FACE GRILLE 4 FACTORY SUPPLIED ROOF CURB 5 MOTION SENSOR (FV-MSVK1) 6 SPARK RESISTANT TYPE 'A' & EXPLOSION PROOF MOTOR 7 CONDENSATION SENSOR (FV-CSK2)

8 BACKDRAFT DAMPER 9 SPRING VIBRATION ISOLATORS 10 FV-VS15K2 (MULTI SPEED WITH TIME DELAY) 11 FAN SPEED CONTROL 9 SPRING CEILING ISOLATORS

REMARKS:

1 INTERLOCK W/ LIGHT SWITCH 2 MINIMUM CFM TO BE SET @60CFM 3 7 DAY PROGRAMMABLE TIME CLOCK (LOCATE TIME CLOCK INSIDE ELEC. RM.) 4 FAN TO RUN CONTINUOSLY 5 PROVIDE SEPARATE SWITCH ON THE WALL

6 INTEGRAL TIME DELAY SWITCH 7 PROVIDE LINE VOLTAGE THERMOSTAT 8 PROVIDE GFCI BRANCH CIRCUIT WIRING 9 PROVIDE WALL MOUNTED HUMIDISTAT MODEL FV-WCCS2-W 10 MINIMUM CFM TO BE SET @50CFM

GAS FIRED HEATERS

SYMBOL	LOCATION	MANUFACTURER AND MODEL	GAS	BTUH INPUT	BTUH OUTPUT	NUMBER OF STAGES	ELECTRICAL V-Ø-HZ	MOTOR HP	TOTAL AMPS	WEIGHT LBS
GH 1, GH 2	RESERVE APPARATUS	MODINE EFFINITY GAS FIRED CONDENSING UNIT PTC-65	NATURAL	65,000	60,450	1	115-1Ø-60	1/8	4.35	125

1. INSTALL IN COMPLIANCE WITH MANUFACTURER REQUIRED CLEARANCES AND REQUIREMENTS.
2. PROVIDE FACTORY SUPPLIED CONTROL THERMOSTAT FOR 115V. CONTROL STEP DOWN TRASNFORMER. ONE THERMOSTAT PER HEATERS.
3. PROVIDE OPTIONAL HEAT DEFLECTOR FOR ALL HEATERS. PROVIDE FACTORY SUPPLIED HORIZONTAL CONCENTRIC VENT KIT.
4. ALUMINIZED STEEL CABINET (20 ga.). BAKED ON POLYESTER POWDER PAINT. ADJUSTABLE AIR-DEFLECTOR BLADES. FINGERPROOF FAN GUARD.
5. PROVIDE FACTORY SUPPLIED TWO L-SHAPED MOUNTING BRACKETS. CONTRACTOR TO PROVIDE ADJUSTABLE MOUNTING BRACKET FOR LEVEL HANGING. COORDINATE WITH STRUCTURAL ENGINEER.
6. SS AL29-4C HEAT EXCHANGER. FACOTRY SUPPLIED SINGLE-STAGE DIRECT SPARK IGNITION(55-310).
7. ETL CERTIFIED. FACTORY INSTALLED POWER EXHAUSTER. SINGLE STAGE GAS CONTROL. FLUE GAS HIGH LIMIT SAFETY CONTROL.
8. CONDENSATE DRAIN OVERFLOW SWITCH. PROVIDE FACTORY SUPPLIE CONDENSATE PUMP & SUSPENSION KIT, Ph NEUTRALIZING KIT.
9. CONTRACTOR CONVENIENCE PACKAGE FEATURING A CONDENSATE PUMP CONVENIENCE OUTLET, UJIT ON/OFF SWITCH. HEATER FUNCTION INDICATOR LIGHTS AND EXTERNAL TERMINAL FOR THERMOSTAT WIRING.

BUILDING AND SAFETY DIVISION
Department of Public Works
FINAL ENERGY APPROVED
UNDER CCR TITLE 24, PART 1, ARTICLE 1 & PART 6
JMoon
PUBLIC WORKS
04/20/2026 10:58:01 AM
This set of plans and specifications must be kept at the job site at all times, and it is unlawful to make any changes, modifications or alterations to these plans or specifications without the prior written permission of the Building Official. The stamping of this set of plans and specifications SHALL NOT, under any circumstances, be deemed to permit or to be an approval of any work or activity that violates any provisions of any County Ordinance or State Law

BUILDING AND SAFETY DIVISION
Department of Public Works
APPROVED
UNDER LOS ANGELES COUNTY CODE TITLE 29
JMoon
PUBLIC WORKS
04/20/2026 10:56:01 AM
This set of plans and specifications must be kept at the job site at all times, and it is unlawful to make any changes, modifications or alterations to these plans or specifications without the prior written permission of the Building Official. The stamping of this set of plans and specifications SHALL NOT, under any circumstances, be deemed to permit or to be an approval of any work or activity that violates any provisions of any County Ordinance or State Law

WILLIAM LOYD JONES ARCHITECT
9415 culver boulevard
culver city, california
9 0 2 3 2
TEL 310 392 3995

KHALIFEH & ASSOCIATES
CONSULTING ENGINEERS
1625 W. OLYMPIC BLVD. #791, LOS ANGELES, CA 90015
Tel: (310) 305-1555 Fax: (310) 305-1550
www.KhalifehAssociates.com
252671
REGISTERED PROFESSIONAL ENGINEER JACK T. KHALIFEH No. M025454 Exp. SEPT. 2026 STATE OF CALIFORNIA

MECHANICAL EQUIPMENT SCHEDULES

FIRE STATION 46
COUNTY OF LOS ANGELES FIRE DEPARTMENT
26720 BOMBERO LANE
VALENCIA, CALIFORNIA

FIVEPOINT Project

Issue	
LACoFD APPROVED	11.MAR.25
100% DD SET	17.APR.25
FIRE DEPARTMENT SUBMITTAL SET	20.MAY.25
PLAN CHECK SUBMITTAL SET	13.AUG.25
PLAN CHECK RESUBMITTAL SET	07.NOV.25
PLAN CHECK RESUBMITTAL SET	17.DEC.25

THE ABOVE DRAWINGS AND SPECIFICATIONS AND IDEAS, DESIGNS AND ARRANGEMENTS REPRESENTED THEREIN ARE OWNED BY, AND ARE THE PROPERTY OF THE ARCHITECT AND SHALL NOT BE USED BY ANY PERSON FOR ANY PURPOSE DISCLOSED TO ANY PERSON OR USED IN CONNECTION WITH ANY WORK OR PROJECT OTHER THAN THE SPECIFIC PROJECT FOR WHICH THEY HAVE BEEN PREPARED AND DEVELOPED WITHOUT THE WRITTEN CONSENT OF THE ARCHITECT. ANY USE WHICH MAY BE MADE OF THESE DRAWINGS OR SPECIFICATIONS SHALL CONSTITUTE CONCLUSIVE EVIDENCE OF ACCEPTANCE OF THESE RESTRICTIONS.

WRITTEN DIMENSIONS ON THESE DRAWINGS SHALL HAVE PRECEDENCE OVER SCALED DIMENSIONS. CONTRACTORS SHALL VERIFY AND BE RESPONSIBLE FOR ALL DIMENSIONS AND CONDITIONS ON THE JOB AND THIS OFFICE MUST BE NOTIFIED OF ANY VARIATION AFFECTING THE WORK SHOWN ON THESE DRAWINGS. SHOP DETAILS MUST BE SUBMITTED TO THIS OFFICE FOR APPROVAL BEFORE PROCESSING WITH FABRICATION.

Copyright 2005

Date	17.DEC.25
Drawn	BDL
Checked	JK
Scale	NTS
Job. No.	

M0.3

ADDENDUM# 3 - BID SET - APRIL 30, 2026

Plot date : 2026-03-18

APPARATUS BAY EXHAUST FAN SCHEDULE

SYMBOL	LOCATION	MAKE	MODEL	CFM	S.P	ELECTRICAL HP	BHP	V	PH	HZ	SERVICE WT.(LBS)	AREA SERVE	REMARKS
GEF 1	ROOF	PLYMOVENT	SAF-585-60	2,600	8.0	7.5	5.0	208	3	60	350	APPARATUS BAY	HOUSING SHALL BE ALUMINUM AA-1050A, WEATHERPROOF FOR OUTDOOR INSTALLATION, SOUND ABSORBING ENCLOSURE, UPBLAST BACKDRAFT RAIN CAP, COMPLETE WITH VIBRATION ISOLATORS AND SEISMIC RESTRAINTS, CENTRIFUGAL DIRECT DRIVE, CLOCKWISE TOP, HORIZONTAL DISCHARGE, INTEGRAL DRAIN, MOTOR SHALL BE 208V/3Ø/60 HZ., BLOWER WHEEL SHALL BE DIRECT DRIVE, INLET FLANGE, OUTLET FLANGE, TEFLON SHAFT SEAL, MANUAL CONTROL OUTLET DAMPER PROVIDE MANUAL OVERRIDE TIME SO THAT THE FAN WILL AUTOMATICALLY SHUTDOWN AFTER PREDETERMINED TIME INTERVAL ACHIEVED BY DUCT SYSTEMS AND BY ENGINE EXHAUST SOURCE CAPTURE. PROVIDE MOUNTING KIT TEVKIT.

PLYMOVENT VEHICLE EXHAUST SYSTEM EQUIPMENT SCHEDULE

CALLOUT	MODEL	QTY	DESCRIPTION
MRP 1	MRP-90-2-MAG	2	PLYMOVENT MRP RAIL SYSTEM, TWO 4" HOSE DROPS WITH MAGNETIC GRABBER
CP 1	OS-3	1	PLYMOVENT OS-3 CONTROL PANEL TO MATCH FAN, 60" A.F.F.

ELEVATION DETAIL OF PLYMOVENT MRP RAIL SYSTEM WITH MAGNETIC GRABBER

NOTE: DRAWINGS ARE TYPICAL AND DIAGRAMMATICAL. IT SHALL BE THE VEHICLE EXHAUST SYSTEM SPECIALISTS OPTION TO MODIFY LOCATIONS, ELEVATIONS AND DETAILS AT THE PROPOSED POINTS OF CONNECTION AND IN AREAS OF POSSIBLE CONFLICT.

MAKE UP AIR UNIT SCHEDULE

SYMBOL	LOCATION	MAKE	MODEL	CFM	E.S.P	ELECTRICAL BHP	HP	V	PH	HZ	HEATING CAPACITY INPUT	OUTPUT	EFF AFFUE (%)	SERVICE WT.(LBS)	AREA SERVE	REMARKS
MUA 1	ROOF	STERLING	PV-40-D	4500	0.75	1.75	3	208	3	60	400,000	320,000	80	2,700	APPARATUS ROOM	UNIT CABINET SHALL BE DIE-FORMED, 18 GAUGE GALVANIZED STEEL & FINISHED IN AIR DRY ENAMEL, NO RETURN, 3 HP ODP HIGH EFFICIENCY MOTOR, 208V/3Ø/60HZ, BURNERS SHALL BE DIE FORMED W/ STAINLESS STEEL PORT PROTECTOR, HEAT EXCHANGER SHALL BE 20 GAUGE 409 STAINLESS STEEL TUBES, POWER VENT FAN SHALL BE PROVIDED, 100% LOCKOUT TYPE IGNITION SYSTEM, 24VAC COMBINATION AUTOMATIC GAS VALVE, SUPPLY BLOWER SHALL BELT DRIVEN, FORWARD CURVED, CENTRIFUGAL TYPE BLOWER, EVAPORATIVE COOLER WITH 12" MEDIA, AIR CONTROL, SELF CLEANING W/ SS WATER TANK, REGULATED WATER FLOW AND OVERFLOW PROTECTION, COOLER CABINET ASSEMBLY MADE OF HEAVY-GAUGE ALUMINIZED STEEL W/ WEATHERPROOF FINISH, INTERIOR MOUNT REMOTE PANEL THAT PROVIDE SYSTEM, HEATING, COOLING, FAN AND AUX CONTROL, SS DRIP PAN, 2" MERV 13 PLEATED FILTER, INTERLOCK RELAY, ROOF CURB (VIC-EQ by MW Sausse) & VIBRATION ISOLATORS 2" DEFLECTION, ELECTRONIC MODULATION W/ DUCT SENSOR & OVRD. STAT, EVAP. FILL AND DRAIN KIT. FURNACE TYPE SHALL BE STANDARD TEMP. RISE 20-60°F PROVIDE SHUT-OFF DEVICE WHEN BAY DOORS OPEN. PROVIDE CONTROL SYSTEM TO MAINTAIN THE APPARATUS BAYS TEMPERATURE AT LEAST 70°F. 7 DAY PROGRAMMABLE THERMOSTAT TO BE LOCATED IN THE APPARATUS BAY. PROVIDE AN AUTOMATIC SHUTOFF DEVICE TO BE ACTIVATED WHEN VEHICLE BAY DOORS ARE OPEN TO CONSERVE ENERGY. PROVIDE DUCT MOUNTED DUCT SMOKE DETECTOR AS PER CMC SECTION 609

FAN COIL OUTSIDE SUPPLY AIR FAN SCHEDULE

SYMBOL	LOCATION	MAKE AND MODEL	CFM SETTINGS MAX.	MIN.	S.P. (IN.)	ELECTRICAL WATTS	V	PH	HZ	WT. (LBS)	MAX. NOISE LEVEL (SONES)	AREA SERVED	REMARKS
SF 1	HALLWAY (SEE PLAN)	PANASONIC FV-15NLFS1H	100	-	0.4	21.0 W	120	1	60	30	1.4	FAN COIL 1, 2, 3 9 & 10 OSA	IN-LINE MOUNTED WITH SPRING CEILING ISOLATOR, INSULATED HOUSING, BACKDRAFT DAMPER. PROVIDE FACOTY SUPPLIED MOUNTING BRACKETS, ECM MOTOR, PROVIDE FACOTY SUPPLIED FILTER BOX WITH MERV-13 FILTER. FAN TO RUN CONTINOUSLY.
SF 2	HALLWAY (SEE PLAN)	PANASONIC FV-15NLFS1H	100	-	0.4	21.0 W	120	1	60	30	1.4	FAN COIL 4, 5, 9 7 & 8 OSA	IN-LINE MOUNTED WITH SPRING CEILING ISOLATOR, INSULATED HOUSING, BACKDRAFT DAMPER. PROVIDE FACOTY SUPPLIED MOUNTING BRACKETS, ECM MOTOR, PROVIDE FACOTY SUPPLIED FILTER BOX WITH MERV-13 FILTER. FAN TO RUN CONTINOUSLY.

GRAVITY VENT HOOD SCHEDULE

SYMBOL	MANUFACTURER & MODEL NO.	AREA SERVED	CFM	THROAT SIZE (*)	FREE AREA (SQ.FT)	PRESSURE DROP (IN.WG.)	WT (LBS.)	ACCESSORIES	REMARKS
GV 1	LOREN COOK 12X12X2 TRE	UTIL/SERVICE SINK ROOM 119	150	12X12	2.29	.004	60	1 2	2
GV 2	LOREN COOK 14X14X2 TRE	FAN COIL-15, 16 & 17 OSA	450	14X14	2.5	.024	60	1 2	1

ACCESSORIES: 1 CUSTOM ROOF CURB AS REQUIRED TO MATCH ROOF SLOPE (GEN. CONT'R TO PROVIDE SHIM)

REMARKS: 1 GALVANIZED HOOD & ROOF CURB, INSECT SCREEN, BACKDRAFT DAMPER ,FILTERED, INTAKE,
2 GALVANIZED HOOD & ROOF CURB, INSECT SCREEN, EXHAUST/COMBUSTION AIR DUCT

GV 1 — GRAVITY VENT HOOD
HOOD TAG NUMBER

(*) - REQUIRED ROOF OPENING

BUILDING AND SAFETY DIVISION
Department of Public Works
FINAL ENERGY APPROVED
UNDER CGR TITLE 24, PART 1, ARTICLE 1 & PART 6
JMoore
PUBLIC WORKS
04/20/2026 10:58:01 AM
This set of plans and specifications must be kept at the job site at all times, and it is unlawful to make any changes, modifications or alterations to these plans or specifications without the prior written permission of the Building Official. The stamping of this set of plans and specifications SHALL NOT, under any circumstances, be deemed to permit or to be an approval of any work or activity that violates any provisions of any County Ordinance or State Law

BUILDING AND SAFETY DIVISION
Department of Public Works
APPROVED
UNDER LOS ANGELES COUNTY CODE TITLE 29
JMoore
PUBLIC WORKS
04/20/2026 10:56:01 AM
This set of plans and specifications must be kept at the job site at all times, and it is unlawful to make any changes, modifications or alterations to these plans or specifications without the prior written permission of the Building Official. The stamping of this set of plans and specifications SHALL NOT, under any circumstances, be deemed to permit or to be an approval of any work or activity that violates any provisions of any County Ordinance or State Law

WILLIAM LOYD JONES ARCHITECT
9415 culver boulevard
culver city, california
9 0 2 3 2
TEL 310 392 3995

ADDENDUM# 3 - BID SET - APRIL 30, 2026

KHALIFEH & ASSOCIATES
CONSULTING ENGINEERS
1625 W. OLYMPIC BLVD. #791, LOS ANGELES, CA 90
Tel: (310) 305-1555 Fax: (310) 305-1550
www.KhalifehAssociates.com
252671

REGISTERED PROFESSIONAL ENGINEER JACK T. KHALIFEH No. M025454 Exp. SEPT. 2026 STATE OF CALIFORNIA

MECHANICAL EQUIPMENT SCHEDULES

FIRE STATION 46
COUNTY OF LOS ANGELES FIRE DEPARTMENT
26720 BOMBERO LANE
VALENCIA, CALIFORNIA

FIVEPOINT Properties

Issue	
LACoFD APPROVED	11.MAR.25
100% DD SET	17.APR.25
FIRE DEPARTMENT SUBMITTAL SET	20.MAY.25
PLAN CHECK SUBMITTAL SET	13.AUG.25
PLAN CHECK RESUBMITTAL SET	07.NOV.25
PLAN CHECK RESUBMITTAL SET	17.DEC.25

THE ABOVE DRAWINGS AND SPECIFICATIONS AND IDEAS, DESIGNS AND ARRANGEMENTS REPRESENTED THEREBY ARE AND SHALL REMAIN THE PROPERTY OF THE ARCHITECT, AND NO PART THEREOF SHALL BE COPIED, DISCLOSED TO OTHERS, OR USED IN CONNECTION WITH ANY WORK OTHER THAN THE SPECIFIC PROJECT FOR WHICH THEY HAVE BEEN PREPARED AND DEVELOPED WITHOUT THE WRITTEN CONSENT OF THE ARCHITECT. VISUAL CONTACT WITH THESE DRAWINGS OR SPECIFICATIONS SHALL CONSTITUTE CONCLUSIVE EVIDENCE OF ACCEPTANCE OF THESE RESTRICTIONS.

WRITTEN DIMENSIONS ON THESE DRAWINGS SHALL HAVE PRECEDENCE OVER SCALED DIMENSIONS. CONTRACTORS SHALL VERIFY AND BE RESPONSIBLE FOR ALL DIMENSIONS AND CONDITIONS. THIS OFFICE MUST BE NOTIFIED BE NOTIFIED OF ANY VARIATIONS FROM THE DIMENSIONS AND CONDITIONS SHOWN BY THESE DRAWINGS. SHOP DETAILS MUST BE SUBMITTED TO THIS OFFICE FOR APPROVAL BEFORE PROCEEDING WITH FABRICATION.

Copyright 2005

Date	17.DEC.25
Drawn	BDL
Checked	JK
Scale	NTS
Job. No.	

M0.4

Plot date : 2026-03-18

PIPE INSULATION THICKNESS (TABLE 120.3-A, CEC 2022)								
FLUID TEMP RANGE (°F)	INSULATION MEAN RATING RATING TEMP (°F)	NOMINAL PIPE DIAMETER (IN INCHES)						
		LESS THAN 1		1 TO 1.25		1.5 TO 4	4 TO 8	8 AND LARGER
		INSULATION THICKNESS REQUIRED (IN INCHES)						
Space heating, hot water systems (hot water)								
141 - 200	125	1.5		1.5		2.0	2.0	2.0
105 - 140	100	1.0		1.5		1.5	1.5	1.5
Space cooling systems (chilled water, refrigerant and brine)								
		Nonres	Res	Nonres	Res			
40 - 60	75	0.5	0.75	0.5	0.75	1.0	1.0	1.0
Below 40	50	1.0		1.5		1.5	1.5	1.5

2 in. wg Static Pos.or Neg.	4 ft Joints			4 ft Joints w/2 ft Reinf. Spacing				
				Joints/Reinf.			Int. Reinf.	
Duct Dimension	Min ga	Joint Reinf.	Alt. joint Reinf.	Min ga	Joint Reinf.	Alt. Joint Reinf.	Tie Rod	Alt. Reinf.
10 in. and under	26	N/R	N/A	Use 4 ft joints				
11–12 in.	26	N/R	N/A					
13–14 in.	26	N/R	N/A					
15–16 in.	26	N/R	N/A					
17–18 in.	26	N/R	N/A					
19–20 in.	26	N/R	N/A					
21–22 in.	26	N/R	N/A					
23–24 in.	26	N/R	N/A					
25–26 in.	26	N/R	N/A					
27–28 in.	26	N/R	N/A					
29–30 in.	24	N/R	N/A	26	N/R	N/A	MPT	C
31–36 in.	24	N/R	N/A	26	N/R	N/A	MPT	D
37–42 in.	22	N/R	N/A	24	N/R	N/A	MPT	E
43–48 in.	22	JTR	(2)C	24	N/R	N/A	MPT	E
	20	N/R	–					
49–54 in.	20	JTR	(2)E	22	N/R	N/A	MPT	F
55–60 in.	20	JTR	(2)E	22	N/R	N/A	MPT	F
61–72 in.	20	JTR	(2)H	20	JTR	(2)E	MPT	H
				18	N/R	N/A	MPT	H
73–84 in.	20	JTR	(2)H	20	JTR	(2)H	2 MPT	I
85–96 in.	18	JTR	(2)H	20	JTR	(2)H	2 MPT	I
97–108 in.	16	JTR	(2)I	18	JTR	(2)H		I
109–120 in.	Not Designed			18	JTR	(2)H		J

Table 2–10 4 ft Coil/Sheet Stock/T25a/T25b (TDC/TDF) Duct Reinforcement

N/R –Not Required
N/A –Not Applicable
JTR –Joint Tie Rod
MPT –Mid Panel Tie Rod(s)
(2)(X) –Indicates 2 external reinforcements of class (X) to be used in lieu of Joint Tie Rods

2.32 HVAC Duct Construction Standards Metal and Flexible • Third Edition

1. SUPPLY AIR, RETURN AIR, AND VENTILATION AIR SERVING HVAC SYSTEM SHALL BE CONDUCTED THROUGH DUCT SYSTEMS CONSTRUCTED OF METAL AS SET FORTH IN THE ANSI/SMACNA 006–2006 HVAC DUCT CONSTRUCTION STANDARDS.
2. RECTANGULAR SUPPLY AIR, RETURN AIR, AND VENTILATION AIR SERVING HVAC SYSTEM IN EXCESS OF 2" W.G. HALL BE COMPLY WITH THE ANSI/SMACNA 006–2006 HVAC DUCT CONSTRUCTION STANDARDS.

SMACNA DUCT CONSTRUCTION STANDARDS

UNIFORM MECHANICAL CODE DUCT INSTALLATION AND DUCT SUPPORT TABLES

TABLE 6–B Construction Details for Round and Flat–Oval Ducts

Duct Diameter Max. Width (in Inches)	Aluminum B.&S. Gage	STEEL–THICKNESS IN INCHES (STEEL–GALVANIZED SHEET GAGE)					GIRTH JOINTS[2]	
	Pressure Equal Or Less Than 2" WC	Pressure Equal Or Less Than 2" WC[2]		Pressure More than 2", equal or Less than 10" WC			Pressure More than 2" equal or Less than 10" WC	Minimum Girth Reinforcing, Maximum Spacing and Angle Size
	Round	Round	Flat–oval	Spiral Seam	Longitudinal Seam	Welded Fittings		
Up to 9	24	0.019 (26)	0.024 (24)	0.019 (26)	0.024 (24)	0.030 (22)	2" Slip	None
Over 9 Up to 14	24	0.019 (26)	0.024 (24)	0.024 (24)	0.030 (22)	0.036 (20)	4" Slip	None
Over 14 Up to 23	22	0.024 (24)	0.030 (22)	0.024 (24)	0.030 (22)	0.036 (20)	4" Slip	None
Over 23 Up to 37	20	0.030 (22)	0.036 (20)	0.030 (22)	0.036 (20)	0.036 (20)	4" Slip	None
Over 37 Up to 51	18	0.036 (20)	0.047 (18)	0.036 (20)	0.036 (20)	0.047 (18)	1 1/4"x1 1/4"x 1/8" Flange	1 1/4"x1 1/4"x1/8" on 72"
Over 51 Up to 61	16	0.047 (18)	0.058 (16)	X	0.047 (18)	0.047 (18)	1 1/4"x1 1/4"x 1/8" Flange	1 1/4"x1 1/4"x1/8" on 72"
Over 61 Up to 84	14	0.058 (16)	0.070 (14)	X	0.058 (16)	0.058 (16)	1 1/2"x1 1/2"x 1/8" Flange	1 1/2"x1 1/2"x1/8" on 48"

1. For pressure less than or equal to 2 inches WC, any of the following joints are acceptable: butt slip; pipe slip; pipe lock; roll slip; snap slip; plenum lock and companion flange.
2. Acceptable longitudinal seams for pressure less or equal to 2 inches WC: Acme (grooved); snap lock; standing and spiral.

NONRESIDENTIAL, HOTEL/MOTEL OCCUPANCIES SECTION 120.4 REQUIREMENTS FOR AIR DISTRIBUTION SYSTEM DUCTS AND PLENUMS

(a) CMC COMPLIANCE:
ALL AIR DISTRIBUTION SYSTEMS DUCTS AND PLENUMS INCLUDING BUT NOT LIMITED TO BUILDING CAVITIES, MECHANICAL CLOSETS, AIR HANDLER BOXES AND SUPPORT PLATFORMS USE AS DUCTS OR PLENUMS, SHALL MEET THE REQUIREMENTS OF THE CMC SECTIONS 601.0, 602.0, 603.0 604.0, 604.0, 605.0 AND ANSI/SMACNA–006–2006 HVAC DUCT CONSTRUCTION STANDARDS METAL AND FLEXIBLE, 3RD EDITION. INCORPORATED HEREIN BY REFERENCE. CONNECTIONS OF METAL DUCTS AND THE INNER CORE OF FLEXIBLE DUCTS SHALL BE MECHANICALLY FASTENED. OPENINGS SHALL BE SEALED WITH MASTIC, TAPE, AEROSOL SEALANT, OR OTHER DUCT–CLOSURE SYSTEM THAT MEETS THE APPLICABLE REQUIREMENTS OF UL 181, UL 181A OR UL 181B. IF MASTIC OR TAPE IS USED TO SEAL OPENINGS GREATER THAN ¼ INCH, THE COMBINATIONS OF MASTIC AND EITHER MESH OR TAPE SHALL BE USED.
PORTIONS OF SUPPLY–AIR AND RETURN–AIR DUCTS CONVEYING HEATED OR COOLED AIR LOCATED IN ONE OR MORE OF THE FOLLOWING SPACES SHALL BE INSULATED TO A MINIMUM INSTALLED LEVEL OF R–8:
1. OUTDOORS: OR
2. IN A SPACE BETWEEN THE ROOF AND AN INSULATED CEILING; OR
3. IN A SPACE DIRECTLY UNDER A ROOF WITH FIXED VENTS OR OPENINGS TO THE OUTSIDE OR UNCONDITIONED SPACES; OR
4. IN AN UNCONDITIONED CRAWLSPACE; OR
5. IN OTHER UNCONDITIONED SPACE

PORTIONS OF SUPPLY–AIR DUCTS THAT ARE NOT IN ONE OF THESE SPACES, INCLUDING DUCTS BURIED IN CONCRETE SLAB, SHALL BE INSULATED TO A MINIMUM INSTALLED LEVEL OF R–4.2 OR BE ENCLOSED IN DIRECTLY CONDITIONED SPACE.

CEILING DIFFUSERS

A/100 — TAG ("KRUEGER" MODEL 1240P) — AIR FLOW SETTING (CFM)

TAG	SIZE/RANGE	TAG	SIZE/RANGE
A	6" x 6" 100 CFM	F	16" x 16" 410-500 CFM
B	8" x 8" 110-165 CFM	G	18" x 18" 510-640 CFM
C	10" x 10" 170-240 CFM	H	20" x 20" 650-850 CFM
D	12" x 12" 250-300 CFM		
E	14" x 14" 310-400 CFM		

NOTE: FOR T-BAR CEILING WITH OVERALL DIMENSION OF 24"x24".

CEILING RETURN AND EXHAUST REGISTERS

A(100) — "KRUEGER" MODEL 1190 SET @ 100 CFM

TAG	SIZE/RANGE	TAG	SIZE/RANGE
A	6" x 6" 100 CFM	F	16" x 16" 660-800 CFM
B	8" x 8" 110-150 CFM	G	18" x 18" 810-950 CFM
C	10" x 10" 160-350 CFM	H	20" x 20" 950-1100 CFM
D	12" x 12" 360-500 CFM	1	22" x 22" 1110-1600 CFM
E	14" x 14" 510-650 CFM	J	

NOTE: FOR T-BAR CEILING WITH OVERALL DIMENSION OF 24"x24".

CEILING DIFFUSERS

CD1/100 — TAG ("KRUEGER" MODEL 1240) — AIR FLOW SETTING (CFM)

TAG	SIZE/RANGE	TAG	SIZE/RANGE
CD1	6" x 6" 120 CFM	CD6	16" x 16" 660-800 CFM
CD2	8" x 8" 130-220 CFM	CD7	18" x 18" 810-950 CFM
CD3	10" x 10" 230-350 CFM	CD8	20" x 20" 960-1100 CFM
CD4	12" x 12" 360-500 CFM	CD9	22" x 22" 1110-1300 CFM
CD5	14" x 14" 510-650 CFM	CD10	24" x 24" 1310-1450 CFM

NOTE: FOR HARD GYPSUM CEILING APPLICATION.

SIDEWALL SUPPLY REGISTERS

A/100 — TAG ("KRUEGER" MODEL 5880) — AIR FLOW SETTING (CFM)

TAG	SIZE/RANGE	TAG	SIZE/RANGE
A	10" x 6" 100 CFM	F	14" x 12" 500 CFM
B	12" x 6" 125 CFM	G	14" x 14" 600 CFM
C	14 1/2"x6 1/2" 275 CFM	H	30" x 12" 900 CFM
D	14" x 8" 350 CFM	I	36" x 16" 1250 CFM
E	14" x 10" 450 CFM	J	

SIDE WALL RETURN AND EXHAUST REGISTERS

A(100) — "KRUEGER" MODEL S580 SET @ 100 CFM

TAG	SIZE/RANGE	TAG	SIZE/RANGE
1	18" x 6" 350 CFM	6	24" x 18" 1000 CFM
2	24" x 8" 500 CFM	7	24" x 24" 1200 CFM
3	16" x 12" 600 CFM	8	36" x 18" 1900 CFM
4	36" x 8" 700 CFM	9	48" x 30" 3500 CFM
5	30" x 12" 850 CFM	10	48" x 36" 4000 CFM

NOTE: FOR HARD GYPSUM CEILING AND WALL APPLICATION USE MODEL S580 H5FF W/ 1" THK. FILTER, HINGE AND CHAIN.

ROUND DIFFUSERS

R/100 — TAG ("ANEMOSTAT" MODEL AR3) — AIR FLOW SETTING (CFM)

TAG	SIZE/RANGE	TAG	SIZE/RANGE
R1	6"Ø 160 CFM	R6	18"Ø 810-1000 CFM
R2	8"Ø 170-250 CFM	R7	21"Ø 1010-1400 CFM
R3	10"Ø 260-400 CFM	R8	24"Ø 1410-1800 CFM
R4	12"Ø 410-500 CFM		
R5	15"Ø 510-800 CFM		

NOTE: PROVIDE SAFETY CABLE TO SUPPORT

NOTES:
1. ALL DIFFUSERS, GRILLES AND REGISTERS SHALL BE 4-WAY THROW UNLESS OTHERWISE NOTED.
2. ALL DIFFUSERS, REGISTERS AND GRILLES LOCATED ABOVE NON-ACCESSIBLE CEILING SHALL BE PROVIDED WITH YOUNG REGULATORS REMOTE OPERATOR VOLUME DAMPER. THE REGULATOR SHALL BE OPERATED THRU THE FACE OF THE DIFFUSERS, REGISTERS AND GRILLES. FOR DETAIL SEE SHEET M4.1, DETAIL #11.
3. ALL DIFFUSERS, REGISTERS AND GRILLES REGISTER LOCATIONS SHALL BE VERIFIED IN THE FIELD WITH ARCHITECT.

LINEAR BAR(SUPPLY) REGISTERS

SYMBOL LB– — DESIGNATION; – — CFM (ANEMOSTAT AL-2)

DESIGNATION	SIZE
LB-1	12 x 4.0 100 CFM
LB-1A	18 x 4.0 150 CFM
LB-2	24 x 4.0 200 CFM
LB-2A	30 x 4.0 250 CFM
LB-3	36 x 4.0 300 CFM
LB-3A	42 x 4.0 350 CFM
LB-4	48 x 4.0 400 CFM
LB-4A	54 x 4.0 450 CFM
LB-5	60 x 4.0 500 CFM
LB-5A	66 x 4.0 550 CFM

AL-2 WITH DOUBLE DEFLECTION BLADES AND OBD DAMPER FOR SUPPLY AIR SIDEWALL REGISTERS W/ BORDER NO. FH AND 0" DEFLECTION AND W/ REMOVABLE CORE

TL-2N WITH DOUBLE DEFLECTION BLADES AND OBD DAMPER FOR SUPPLY AIR FLOOR REGISTERS W/ FG FLOOR REINFORCED BORDER AND W/ REMOVABLE CORE AND 0" DEFLECTION

LINEAR BAR(RETURN) REGISTERS

SYMBOL LB– — DESIGNATION; – — CFM (ANEMOSTAT AL-1)

DESIGNATION	SIZE
LB-R1	12 x 4.0 100 CFM
LB-R1A	18 x 4.0 150 CFM
LB-R2	24 x 4.0 200 CFM
LB-R2A	30 x 4.0 250 CFM
LB-R3	36 x 4.0 300 CFM
LB-R3A	42 x 4.0 350 CFM
LB-R4	48 x 4.0 400 CFM
LB-R4A	54 x 4.0 450 CFM
LB-R5	60 x 4.0 500 CFM
LB-R5A	24 x 24.0 1150 CFM

AL-1 WITH SINGLE DEFLECTION BLADES FOR RETURN AIR SIDEWALL REGISTERS W/ BORDER NO. FH AND 0" DEFLECTION AND W/ REMOVABLE CORE

TL-1N WITH SINGLE DEFLECTION BLADES FOR RETURN AIR FLOOR REGISTERS W/ FG FLOOR REINFORCED BORDER AND W/ REMOVABLE CORE AND 0" DEFLECTION

NOTES:
1. ALL DIFFUSERS, REGISTERS AND GRILLES LOCATED ABOVE NON-ACCESSIBLE CEILING SHALL BE PROVIDED WITH YOUNG REGULATORS WITH REMOTE OPERATOR VOLUME DAMPER. THE REGULATOR SHALL BE OPERATED THRU THE FACE OF THE DIFFUSERS, REGISTERS OR GRILLES. OTHERWISE PROVIDE MANUAL VOLUME DAMPERS FOR EACH AND EVERY REGISTER LOCATED AT THE FURTHER POSSIBLE BRANCH.
2. FLOOR MOUNTED LINEAR BAR WILL BE 3 1/2" OR 2 1/2" WIDE LINEAR GRILL AS SHOWN ON THE PLAN, REMOVABLE METAL GRILLS, US 10B FINISH, 1/8" METAL BORDER WITH 1/8" METAL BARS. THE LINEAR BAR TO BE INSTALLED TIGHT AGAINST THE METAL DOOR FRAMES IN THOSE LOCATION (SEE PLANS FOR LOCATION).
3. SIDE WALL LINEAR BAR WILL BE WIDTH INDICATED ON THE PLAN, PROVIDE REMOVABLE METAL GRILLES, US 10B FINISH, NO. 7 BORDER WITH 1/4" METAL BARS. CONFIRM FINAL BORDER/FINISH WITH ARCH
4. ALL DIFFUSERS, REGISTERS AND GRILLES REGISTER LOCATIONS SHALL BE VERIFIED IN THE FIELD WITH ARCH.
5. ALL DIFFUSERS, REGISTERS AND GRILLES SHALL BE PROVIDED WITH OBD'S FOR FINAL USER ADJUSTMENT.

BUILDING AND SAFETY DIVISION
Department of Public Works
FINAL ENERGY APPROVED
UNDER CCR TITLE 24, PART 1, ARTICLE 1 & PART 6
JMoon
PUBLIC WORKS
04/20/2026 10:58:01 AM
This set of plans and specifications must be kept at the job site at all times, and it is unlawful to make any changes, modifications or alterations to these plans or specifications without the prior written permission of the Building Official. The stamping of this set of plans and specifications SHALL NOT, under any circumstances, be deemed to permit or to be an approval of any work or activity that violates any provisions of any County Ordinance or State Law

BUILDING AND SAFETY DIVISION
Department of Public Works
APPROVED
UNDER LOS ANGELES COUNTY CODE TITLE 29
JMoon
PUBLIC WORKS
04/20/2026 10:56:01 AM
This set of plans and specifications must be kept at the job site at all times, and it is unlawful to make any changes, modifications or alterations to these plans or specifications without the prior written permission of the Building Official. The stamping of this set of plans and specifications SHALL NOT, under any circumstances, be deemed to permit or to be an approval of any work or activity that violates any provisions of any County Ordinance or State Law

WILLIAM LOYD JONES ARCHITECT
9415 culver boulevard
culver city, california
9 0 2 3 2
TEL 310 392 3995

ADDENDUM# 3 - BID SET - APRIL 30, 2026

KHALIFEH & ASSOCIATES
CONSULTING ENGINEERS
1625 W. OLYMPIC BLVD. #791, LOS ANGELES, CA 90
Tel: (310) 305-1555 Fax: (310) 305-1550
www.KhalifehAssociates.com
252671
REGISTERED PROFESSIONAL ENGINEER JACK T. KHALIFEH No. M025454 Exp. SEPT. 2026 STATE OF CALIFORNIA

MECHANICAL EQUIPMENT SCHEDULES

FIRE STATION 46
COUNTY OF LOS ANGELES FIRE DEPARTMENT
26720 BOMBERO LANE
VALENCIA, CALIFORNIA

FIVEPOINT Project

Issue	
LACoFD APPROVED	11.MAR.25
100% DD SET	17.APR.25
FIRE DEPARTMENT SUBMITTAL SET	20.MAY.25
PLAN CHECK SUBMITTAL SET	13.AUG.25
PLAN CHECK RESUBMITTAL SET	07.NOV.25
PLAN CHECK RESUBMITTAL SET	17.DEC.25

THE ABOVE DRAWINGS AND SPECIFICATIONS AND IDEAS, DESIGNS AND ARRANGEMENTS REPRESENTED THEREIN ARE AND SHALL REMAIN THE PROPERTY OF KHALIFEH & ASSOCIATES AND SHALL NOT BE USED IN WHOLE OR PART WITHOUT THE WRITTEN CONSENT OF KHALIFEH & ASSOCIATES. THEY ARE NOT TO BE LOANED, COPIED OR DISCLOSED TO OTHERS OR USED IN CONNECTION WITH ANY WORK OR PROJECT OTHER THAN THE SPECIFIC PROJECT FOR WHICH THEY HAVE BEEN PREPARED AND DEVELOPED WITHOUT THE WRITTEN CONSENT OF KHALIFEH & ASSOCIATES. VISUAL CONTACT WITH THESE DRAWINGS OR SPECIFICATIONS SHALL CONSTITUTE CONCLUSIVE EVIDENCE OF ACCEPTANCE OF THESE RESTRICTIONS.

WRITTEN DIMENSIONS ON THESE DRAWINGS SHALL HAVE PRECEDENCE OVER SCALED DIMENSIONS. CONTRACTORS SHALL VERIFY AND BE RESPONSIBLE FOR ALL DIMENSIONS AND CONDITIONS ON THE JOB AND THIS OFFICE MUST BE NOTIFIED OF ANY VARIATIONS AND DISCREPANCIES BEFORE PROCEEDING WITH THE WORK. SHOP DRAWINGS, SHOP DETAILS, MUST BE SUBMITTED TO THIS OFFICE FOR APPROVAL BEFORE PROCESSING WITH FABRICATION.
Copyright 2005

Date	17.DEC.25
Drawn	BDL
Checked	JK
Scale	NTS
Job. No.	

M0.5

Plot date : 2026-03-18

CERTIFICATE OF COMPLIANCE - NONRESIDENTIAL PERFORMANCE COMPLIANCE METHOD			NRCC-PRF-E
Nonresidential Performance Compliance Method			(Page 1 of 22)
Project Name:	Fire Station #46	Date Prepared:	2025-12-13

A. General Information					
1	Project Name	Fire Station #46			
2	Run Title	Title 24 Analysis			
3	Project Location	Mission Village			
4	City	Valencia	5	Standards Version	Compliance 2022
6	Zip code	91355	7	Compliance Software (version)	EnergyPro 9.4
8	Climate Zone	9	9	Building Orientation (deg)	270
10	Building Type(s)	• Hotel/Motel	11	Weather File	VAN-NUYS_STYP20.epw
12	Project Scope	• New envelope and mechanical	13	Number of Dwelling Units	0
14	Total Conditioned Floor Area in Scope (ft^2)	11611.2	15	Total # of hotel/motel rooms	10
16	Total Unconditioned Floor Area (ft^2)	0	17	Fuel Type	Natural gas
18	Nonresidential Conditioned Floor Area	10158.4	19	Total # of Stories (Habitable Above Grade)	1
20	Residential Conditioned Floor Area	1452.81			

CERTIFICATE OF COMPLIANCE - NONRESIDENTIAL PERFORMANCE COMPLIANCE METHOD	NRCC-PRF-E
Nonresidential Performance Compliance Method	(Page 2 of 22)

B. PROJECT SUMMARY

Table B shows which building components are included in the performance calculation. If indicated as not included, the project must show compliance prescriptively if within the permit application.

Building Components Complying via Performance						Building Components Complying Prescriptively	
Envelope (See Table G)	Nonres	Performance	Solar Thermal Water Heating (See Table I3)	☐	Performance	The following building components are ONLY eligible for prescriptive compliance and should be documented on the NRCC form listed if within the scope of the permit application (i.e. compliance will not be shown on the NRCC-PRF-E).	
	MultiFam	Not Included		☒	Not Included		
Mechanical (See Table H)	Nonres	Performance	Covered Process: Commercial Kitchens (see Table J)	☐	Performance	Indoor Lighting (Unconditioned) 140.6 & 170.2(e)	NRCC-LTI-E is required
	MultiFam	Not Included		☒	Not Included	Outdoor Lighting 140.7 & 170.2(e)	NRCC-LTO-E is required
Domestic Hot Water (See Table I)	Nonres	Performance	Covered Process: Laboratory Exhaust (see Table J)	☐	Performance	Sign Lighting 140.8 & 170.2(e)	NRCC-LTS-E is required
	MultiFam	Not Included		☒	Not Included	**Building Components Complying with Mandatory Measures**	
Lighting (Indoor Conditioned, see Table K)	Nonres	Not Included	Photovoltaics (see Table F)	☒	Performance	Electrical power systems, commissioning, solar ready, elevator and escalator requirements are mandatory and should be documented on the NRCC form listed if applicable (i.e. compliance will not be shown on the NRCC-PRF-E.)	
	MultiFam	Not Included		☐	Not Included	Electrical Power Distribution 110.11	NRCC-ELC-E is required
			Battery (see Table F)	☒	Performance	Commissioning 120.8	NRCC-CXR-E is required
				☐	Not Included	Solar and Battery 110.10	NRCC-SAB-E is required

CERTIFICATE OF COMPLIANCE - NONRESIDENTIAL PERFORMANCE COMPLIANCE METHOD	NRCC-PRF-E
Nonresidential Performance Compliance Method	(Page 3 of 22)

C1. COMPLIANCE SUMMARY

COMPLIES[3]			
	Time Dependent Valuaton (TDV)		Source Energy Use
	Efficiency[1] (kBtu/ft^2 - yr)	Total[2] (kBtu/ft^2 - yr)	Total[2] (kBtu/ft^2 - yr)
Standard Design	236.28	151.88	16.6
Proposed Design	216.22	100.29	14.96
Compliance Margins	**20.06**	**51.59**	**1.64**
	Pass	**Pass**	**Pass**

[1] Efficiency measures include improvements like a better building envelope and more efficient equipment
[2] Compliance Totals include efficiency, photovoltaics and batteries
[3] New Construction, Complete Addition Scope: Building complies when all efficiency and total compliance margins are greater than or equal to zero and unmet load hour limits are not exceeded
Existing, Addition and Alteration Scope: Building complies when efficiency compliance margin is greater than or equal to zero and unmet load hour limits are not exceeded

CERTIFICATE OF COMPLIANCE - NONRESIDENTIAL PERFORMANCE COMPLIANCE METHOD	NRCC-PRF-E
Nonresidential Performance Compliance Method	(Page 4 of 22)

C2. TDV ENERGY COMPLIANCE RESULTS FOR PERFORMANCE COMPONENTS (Annual TDV Energy Use, kBtu/ft^2 - yr)

COMPLIES[2]			
Energy Component	Standard Design (TDV)	Proposed Design (TDV)	Compliance Margin (TDV)[1]
Space Heating	2.1	1.57	0.53
Space Cooling	76.66	69.78	6.88
Indoor Fans	96.28	89.37	6.91
Heat Rejection	0	0	0
Pumps & Misc.	0	0	0
Domestic Hot Water	23.49	15.77	7.72
Indoor Lighting	37.75	39.73	-1.98
Flexibility	---	---	---
EFFICIENCY COMPLIANCE TOTAL	**236.28**	**216.22**	**20.06 (8.5%)**
Photovoltaics	-84.31	-96.14	11.83
Batteries	-0.09	-19.79	19.7
TOTAL COMPLIANCE	**151.88**	**100.29**	**51.59 (34%)**

[1] Notes: This number in parenthesis following the Compliance Margin in column 4, represents the Percent Better than Standard.

CERTIFICATE OF COMPLIANCE - NONRESIDENTIAL PERFORMANCE COMPLIANCE METHOD	NRCC-PRF-E
Nonresidential Performance Compliance Method	(Page 6 of 22)

C4. SOURCE ENERGY COMPLIANCE RESULTS FOR PERFORMANCE COMPONENTS (Annual SOURCE Energy Use, kBtu/ft^2 /yr)

COMPLIES[2]			
Energy Component	Standard Design (SOURCE)	Proposed Design (SOURCE)	Compliance Margin (SOURCE)[1]
Space Heating	0.48	0.25	0.23
Space Cooling	3.56	3.58	-0.02
Indoor Fans	7.18	7.54	-0.36
Heat Rejection	0	0	0
Pumps & Misc.	0	0	0
Domestic Hot Water	5.38	3.86	1.52
Indoor Lighting	2.68	2.83	-0.15
Flexibility	---	---	---
EFFICIENCY COMPLIANCE TOTAL	**19.28**	**18.06**	**1.22 (6.3%)**
Photovoltaics	-2.64	-2.96	0.32
Batteries	-0.04	-0.14	0.1
TOTAL COMPLIANCE	**16.6**	**14.96**	**1.64 (9.9%)**

[1] Notes: This number in parenthesis following the Compliance Margin in column 4, represents the Percent Better than Standard.

CERTIFICATE OF COMPLIANCE - NONRESIDENTIAL PERFORMANCE COMPLIANCE METHOD	NRCC-PRF-E
Nonresidential Performance Compliance Method	(Page 5 of 22)

C3. TDV ENERGY RESULTS FOR NON-REGULATED COMPONENTS[1]

Non-Regulated Energy Component	Standard Design (TDV)	Proposed Design (TDV)	Compliance Margin (TDV)[1]
Receptacle	88.77	88.77	---
Process	81.2	81.2	---
Other Ltg	3.16	3.16	---
Process Motors	1.15	1.15	---
TOTAL (TOTAL COMPLIANCE + NON-REGULATED COMPONENTS)	**326.16**	**274.57**	**51.59 (15.8%)**

[1] Notes: This table is not used for Energy Code Compliance.

BUILDING AND SAFETY DIVISION
Department of Public Works
FINAL ENERGY APPROVED
UNDER CGR TITLE 24, PART 1, ARTICLE 1 & PART 6
JMoon
PUBLIC WORKS
04/20/2026 10:58:02 AM
This set of plans and specifications must be kept at the job site at all times, and it is unlawful to make any changes, modifications or additions to these plans or specifications without the prior written permission of the Building Official. The stamping of this set of plans and specifications SHALL NOT, under any circumstances, be deemed to permit or to be an approval of any work or activity that violates any provisions of any County Ordinance or State Law

BUILDING AND SAFETY DIVISION
Department of Public Works
APPROVED
UNDER LOS ANGELES COUNTY CODE TITLE 29
JMoon
PUBLIC WORKS
04/20/2026 10:56:01 AM
This set of plans and specifications must be kept at the job site at all times, and it is unlawful to make any changes, modifications or additions to these plans or specifications without the prior written permission of the Building Official. The stamping of this set of plans and specifications SHALL NOT, under any circumstances, be deemed to permit or to be an approval of any work or activity that violates any provisions of any County Ordinance or State Law

WILLIAM LOYD JONES
ARCHITECT
9415 culver boulevard
culver city, california
9 0 2 3 2
TEL 310 392 3995

ADDENDUM# 3 - BID SET - APRIL 30, 2026

KHALIFEH & ASSOCIATES
CONSULTING ENGINEERS
1625 W. OLYMPIC BLVD. #791, LOS ANGELES, CA 90
Tel: (310) 305-1555 Fax: (310) 305-1550
www.KhalifehAssociates.com
252671
REGISTERED PROFESSIONAL ENGINEER
JACK Y. KHALIFEH
No. M025454
Exp. SEPT. 2026
STATE OF CALIFORNIA

T-24 ENERGY COMPLIANCE FORMS

FIRE STATION 46
COUNTY OF LOS ANGELES FIRE DEPARTMENT
26720 BOMBERO LANE
VALENCIA, CALIFORNIA

FIVEPOINT Los Angeles

Issue	
LACoFD APPROVED	11.MAR.25
100% DD SET	17.APR.25
FIRE DEPARTMENT SUBMITTAL SET	20.MAY.25
PLAN CHECK SUBMITTAL SET	13.AUG.25
PLAN CHECK RESUBMITTAL SET	07.NOV.25
PLAN CHECK RESUBMITTAL SET	17.DEC.25

THE ABOVE DRAWINGS AND SPECIFICATIONS AND IDEAS, DESIGNS AND ARRANGEMENTS REPRESENTED THEREIN ARE AND SHALL REMAIN THE PROPERTY OF THE ARCHITECT AND ARE TO BE RETURNED TO THE ARCHITECT UPON DISCLOSED TO OTHERS OR USED IN CONNECTION WITH ANY WORK OR PROJECT OTHER THAN THE SPECIFIC PROJECT FOR WHICH THEY HAVE BEEN PREPARED AND DEVELOPED WITHOUT THE WRITTEN CONSENT OF THE ARCHITECT. THE CONTRACT WITH THESE DRAWINGS OR SPECIFICATIONS SHALL CONSTITUTE CONCLUSIVE EVIDENCE OF ACCEPTANCE OF THESE RESTRICTIONS.

WRITTEN DIMENSIONS ON THESE DRAWINGS SHALL HAVE PRECEDENCE OVER SCALED DIMENSIONS. CONTRACTORS SHALL VERIFY AND BE RESPONSIBLE FOR ALL DIMENSIONS AND CONDITIONS ON THE JOB AND THIS OFFICE MUST BE NOTIFIED OF ANY VARIATIONS AFFECTING THE WORK HEREIN SHOWN. SHOP DRAWINGS, SHOP DETAILS, MUST BE SUBMITTED TO THIS OFFICE FOR APPROVAL BEFORE PROCEEDING WITH FABRICATION.

Copyright 2005

Date	17.DEC.25
Drawn	BDL
Checked	JK
Scale	NTS
Job. No.	

M0.6

Plot date : 2026-03-18

C5. SOURCE ENERGY RESULTS FOR NON-REGULATED COMPONENTS[1]

Non-Regulated Energy Component	Standard Design (SOURCE)	Proposed Design (SOURCE)	Compliance Margin (SOURCE)[1]
Receptacle	8.44	8.44	---
Process	6.32	6.32	---
Other Ltg	0.34	0.34	---
Process Motors	0.09	0.09	---
TOTAL (TOTAL COMPLIANCE + NON-REGULATED COMPONENTS)	**31.79**	**30.15**	**1.64 (5.2%)**

[1] *Notes: This table is not used for Energy Code Compliance.*

C6. 'ABOVE CODE' QUALIFICATIONS

☐ This project is pursuing CalGreen Tier 1 ☐ This project is pursuing CalGreen Tier 2

C7. ENERGY USE SUMMARY

Energy Component	Standard Design Site (MWh)	Proposed Design Site (MWh)	Margin (MWh)	Standard Design Site (MBtu)	Proposed Design Site (MBtu)	Margin (MBtu)
Space Heating	---	0.5	---	6.5	1.2	5.3
Space Cooling	28.2	26.6	1.6	---	---	---
Indoor Fans	41.8	39.3	2.5	---	---	---
Heat Rejection	---	---	---	---	---	---
Pumps & Misc.	---	---	---	---	---	---
Domestic Hot Water	1	---	---	69.6	51.8	17.8
Indoor Lighting	16.9	17.8	-0.9	---	---	---
Flexibility	---	---	---	---	---	---
EFFICIENCY TOTAL	**87.9**	**84.2**	**3.7**	**76.1**	**53**	**23.1**
Photovoltaics	-46.5	-52.5	6	---	---	---
Batteries	0	0.1	-0.1	---	---	---
ENERGY USE SUBTOTAL	**41.4**	**31.8**	**9.6**	**76.1**	**53**	**23.1**
Receptacle	35.7	35.7	0	26.9	26.9	0
Process	36	36	0	---	---	---
Other Ltg	1.3	1.3	0	---	---	---
Process Motors	0.5	0.5	0	---	---	---
ENERGY USE TOTAL	**114.9**	**105.3**	**9.6**	**103**	**79.9**	**23.1**

C8. ENERGY USE INTENSITY (EUI)

	Standard Design (kBtu/ft² / yr)	Proposed Design (kBtu/ft² / yr)	Margin (kBtu/ft² / yr)	Margin Percentage
GROSS EUI[1]	56.3	53.25	3.05	5.42
NET EUI[1]	42.63	37.82	4.81	11.28

[1] *Notes: Gross EUI is Energy Use Total (not including PV)/Total Building Area. Net EUI is Energy Use Total (including PV)/Total Building Area.*

D1. EXCEPTIONAL CONDITIONS

- The project uses the Simplified Geometry Performance Modeling Approach which is not capable of modeling daylighting controls and assumes the prescriptive Secondary Daylit Control requirements are met. PRESCRIPTIVE COMPLIANCE documentation (form NRCC-LTI-02-E) for the requirements of section 140.6(d) Automatic Daylighting Controls in Secondary Daylit Zones is required.
- The user model includes space(s) that are designed to be served by mechanical cooling systems, but the cooling systems were not included in the simulation model. A cooling system has been modeled for both the proposed and standard cases.
- The user model includes space(s) without sufficient cooling equipment. Cooling equipment has been added to the model to meet cooling loads.
- PV/Battery Building Type has been modified from software defaults for one or more spaces. Review project's PV/Battery Building Type(s) with documentation author. Refer to Energy Code section 140.10 for Nonresidential or 170.2(g) for more information.

F1. REQUIRED PV SYSTEMS

01	02	03	04	05	06	07	08	09	10	11	12
DC System Size (kWdc)	Exception[1]	Module Type	Array Type	Power Electronics	CFI	Azimuth (deg)	Tilt Input	Array Angle (deg)	Tilt: (x in 12)	Inverter Eff. (%)	Annual Solar Access (%)
30		Standard (14-17%)	Fixed	Microinverters	true	150-270	n/a	n/a	<=7:12	96	100

[1] *See Table D1 for any PV exceptions used.*

F1B. PV BATTERY BUILDING TYPE(S)

01	02	03
Building Occupancy Type* (From Table 140.10-A/B and 170.2-U/V)	Conditioned Floor Area (ft²)	Unconditioned Floor Area (ft²)
Grocery	0	0
High-Rise Multifamily	0	0
Office, Financial Institutions, Unleased Tenant Space	8403.87	0
Retail	0	0
School	0	0
Warehouse	0	0
Auditorium, Convention Center, Hotel/Motel, Library, Medical Office Building/Clinic, Restaurant, Theater	3207.3	0
None	0	0

**Building Occupancy Types are defined in Section 100.1 of the Energy Code*

F2. BATTERY SYSTEMS[1]

01	02	03	04	05	06	07
Control	Capacity (kWh)	Charging Efficiency	Charging Rate (kW)	Discharging Efficiency	Discharging Rate (kW)	Round Trip Efficiency
AdvancedDR	30	N/A	30	N/A	30	0.9

[1] *See Table D1 for any Battery exceptions used.*

G1. ENVELOPE GENERAL INFORMATION (conditioned spaces only)

01	02	03	04
Opaque Surfaces & Orientation	Total Gross Surface Area (ft²)	Total Fenestration Area (ft²)	Window to Wall Ratio (%)
North-Facing[1]	3084	388	12.58
East-Facing[2]	1848	685	37.07
South-Facing[3]	3212	484	15.07
West-Facing[4]	2217	765.5	34.53
Total	**10361**	**2322.5**	**22.42**
Roof	11610.2	0	0

Notes
[1] *North-Facing is oriented to within 45 degrees of true north, including 4500'00" east of north (NE), but excluding 4500'00" west of north (NW),*
[2] *East-Facing is oriented to within 45 degrees of true east, including 4500'00" south of east (SE), but excluding 4500'00" north of east (NE),*
[3] *South-Facing is oriented to within 45 degrees of true south, including 4500'00" west of south (SW), but excluding 4500'00" east of south (SE),*
[4] *West-Facing is oriented to within 45 degrees of true west, including 4500'00" north of west (NW), but excluding 4500'00" south of west (SW),*

G4. NONRESIDENTIAL AIR BARRIER

01	02
Building Story Name	Air Barrier
Com-Main Floor	No air barrier
Com-Apparatus Room	No air barrier

G5. OPAQUE SURFACE ASSEMBLY SUMMARY

01	02	03	04	05	06		07	08	09	10
Surface Name	Construction Type	Area (ft²)	Framing Type	Cavity R-Value	Continuous R-Value		Units	Value	Description of Assembly Layers	Status[1]
					Interior	Exterior				
R-21 Wall8	Exterior Wall	10,361	Wood	0	N/A	21	U-factor	0.0406	Stucco - 7/8 in. Vapor permeable felt - 1/8 in. OSB - Oriented Strand Board - 1/2 in. Composite-1 Glass fiber batt - 5 1/2 in. R21 (CEC Default) Gypsum Board - 5/8 in.	N
Slab On Grade13	Underground Floor	11,611.2	N/A	0	N/A	N/A	F-factor	0.73	Slab Type =Unheated slab on grade Insulation Orientation =None Insulation R-Value =none	N
R-38 Roof Attic15	Roof	11,610.2	Wood	0	N/A	38	U-factor	0.0243	Metal Standing Seam - 1/16 in. Vapor permeable felt - 1/8 in. Plywood - 1/2 in. Air - Cavity - Wall Roof Ceiling - 4 in. or more Composite-2 Glass fiber batt - 12 in. R38 (CEC Default) Gypsum Board - 5/8 in.	N
R-13 Wall17	Interior Wall	11,919.3	Wood	13	N/A	N/A	U-factor	0.0952	Stucco - 7/8 in. Vapor permeable felt - 1/8 in. Composite-3 Gypsum Board - 1/2 in.	N

[1] *Status: N - New, A - Altered, E - Existing*

BUILDING AND SAFETY DIVISION
Department of Public Works
FINAL ENERGY APPROVED
UNDER CGR TITLE 24, PART 1, ARTICLE 1.6,PART 6
JMOON
PUBLIC WORKS
04/20/2026 10:58:02 AM
This set of plans and specifications must be kept at the job site at all times, and it is unlawful to make any changes, modifications or alterations to these plans or specifications without the prior written permission of the Building Official. The stamping of this set of plans and specifications SHALL NOT, under any circumstances, be deemed to permit or to be an approval of any work or activity that violates any provisions of any County Ordinance or State Law.

BUILDING AND SAFETY DIVISION
Department of Public Works
APPROVED
UNDER LOS ANGELES COUNTY CODE TITLE 29
JMOON
PUBLIC WORKS
04/20/2026 10:56:01 AM
This set of plans and specifications must be kept at the job site at all times, and it is unlawful to make any changes, modifications or alterations to these plans or specifications without the prior written permission of the Building Official. The stamping of this set of plans and specifications SHALL NOT, under any circumstances, be deemed to permit or to be an approval of any work or activity that violates any provisions of any County Ordinance or State Law.

WILLIAM LOYD JONES
ARCHITECT
9415 culver boulevard
culver city, california
9 0 2 3 2
TEL 310 392 3995

ADDENDUM# 3 - BID SET - APRIL 30, 2026

KHALIFEH & ASSOCIATES
CONSULTING ENGINEERS
1625 W. OLYMPIC BLVD. #791, LOS ANGELES, CA 90015
Tel: (310) 305-1555 Fax: (310) 305-1550
www.KhalifehAssociates.com
252671

REGISTERED PROFESSIONAL ENGINEER
JACK Y. KHALIFEH
No. M025454
Exp. SEPT. 2026
STATE OF CALIFORNIA

T-24 ENERGY COMPLIANCE FORMS

FIRE STATION 46
COUNTY OF LOS ANGELES FIRE DEPARTMENT
26720 BOMBERO LANE
VALENCIA, CALIFORNIA

FIVEPOINT Project Number

Issue	
LACoFD APPROVED	11.MAR.25
100% DD SET	17.APR.25
FIRE DEPARTMENT SUBMITTAL SET	20.MAY.25
PLAN CHECK SUBMITTAL SET	13.AUG.25
PLAN CHECK RESUBMITTAL SET	07.NOV.25
PLAN CHECK RESUBMITTAL SET	17.DEC.25

THE ABOVE DRAWINGS AND SPECIFICATIONS AND IDEAS, DESIGNS AND ARRANGEMENTS REPRESENTED THEREBY ARE AND SHALL REMAIN THE PROPERTY OF THE ARCHITECT, AND NO PART THEREOF SHALL BE COPIED, DISCLOSED TO OTHERS OR USED IN CONNECTION WITH ANY WORK OTHER THAN THE SPECIFIC PROJECT FOR WHICH THEY WERE PREPARED AND DEVELOPED WITHOUT THE WRITTEN CONSENT OF THE ARCHITECT. VISUAL CONTACT WITH THESE DRAWINGS OR SPECIFICATIONS SHALL CONSTITUTE CONCLUSIVE EVIDENCE OF ACCEPTANCE OF THESE RESTRICTIONS.

WRITTEN DIMENSIONS ON THESE DRAWINGS SHALL HAVE PRECEDENCE OVER SCALE DIMENSIONS. CONTRACTORS SHALL VERIFY AND BE RESPONSIBLE FOR ALL DIMENSIONS AND CONDITIONS ON THE JOB. THE ARCHITECT MUST BE NOTIFIED OF ANY VARIATIONS FROM THE DIMENSIONS AND CONDITIONS SHOWN BY THESE DRAWINGS. SHOP DETAILS MUST BE SUBMITTED TO THIS OFFICE FOR APPROVAL BEFORE PROCEEDING WITH FABRICATION.
Copyright 2005

Date	17.DEC.25
Drawn	BDL
Checked	JKK
Scale	NTS
Job. No.	

M0.7

Plot date : 2026-03-18

G6A. OPAQUE DOOR SUMMARY (NONRESIDENTIAL)

01	02	03	04
Assembly Name	Area (ft²)	Overall U-factor	Status[1]
Metal Door19	665	0.7	N

[1] *Status: N - New, A - Altered, E - Existing*

G7A. FENESTRATION ASSEMBLY SUMMARY (NONRESIDENTIAL)

01	02	03	04	05	06	07	08	09
Fenestration Assembly Name	Fenestration Type/ Product Type / Frame Type	Certification Method[1]	Assembly Method	Area (ft²)	Overall U-factor	Overall SHGC	Overall VT	Status[2]
Type J Fixed	Vertical fenestration Fixed window N/A	NFRC	Manufactured	150	0.36	0.19	0.41	N
Type Q Moving Glass	Vertical fenestration Operable window N/A	NFRC	Manufactured	144	0.42	0.2	0.5	N
Type B Fixed	Vertical fenestration Fixed window N/A	NFRC	Manufactured	95	0.24	0.27	0.64	N
Type C Fixed	Vertical fenestration Fixed window N/A	NFRC	Manufactured	1,224	0.26	0.22	0.5	N
Type A Fixed	Vertical fenestration Fixed window N/A	NFRC	Manufactured	226	0.24	0.27	0.64	N
Type E Fixed	Vertical fenestration Fixed window N/A	NFRC	Manufactured	198	0.24	0.27	0.64	N
Type D Fixed	Vertical fenestration Fixed window N/A	NFRC	Manufactured	135	0.24	0.27	0.64	N
Type F Fixed	Vertical fenestration Fixed window N/A	NFRC	Manufactured	50	0.36	0.19	0.41	N

[1] *Notes: Newly installed fenestration shall have a certified NFRC Label Certificate or use the CEC default tables found in Table 110.6-A and Table 110.6-B. Center of Glass (COG) values are for the glass-only, determined by the manufacturer, and are shown for ease of verification. Site-built fenestration values are calculated per Nonresidential Appendix NA6 and are used in the analysis.*
[2] *Status: N - New, A - Altered, E - Existing*

G7A. FENESTRATION ASSEMBLY SUMMARY (NONRESIDENTIAL)

01	02	03	04	05	06	07	08	09
Fenestration Assembly Name	Fenestration Type/ Product Type / Frame Type	Certification Method[1]	Assembly Method	Area (ft²)	Overall U-factor	Overall SHGC	Overall VT	Status[2]
Type N Fixed	Vertical fenestration Fixed window N/A	NFRC	Manufactured	88	0.24	0.27	0.64	N
Type J.1 Fixed	Vertical fenestration Fixed window N/A	NFRC	Manufactured	12.5	0.36	0.19	0.41	N

[1] *Notes: Newly installed fenestration shall have a certified NFRC Label Certificate or use the CEC default tables found in Table 110.6-A and Table 110.6-B. Center of Glass (COG) values are for the glass-only, determined by the manufacturer, and are shown for ease of verification. Site-built fenestration values are calculated per Nonresidential Appendix NA6 and are used in the analysis.*
[2] *Status: N - New, A - Altered, E - Existing*

H1. DRY SYSTEM EQUIPMENT (FURNACES, AIR HANDLING UNITS, HEAT PUMPS, VRF, ECONOMIZERS ETC.)

01	02	03	04	05	06	07	08	09	10	11	12
			Heating				Cooling				
Equipment Name	Equipment Type	Qty	Total Heating Output (kBtu/h)	Supp Heat Output (kBtu/h)	Efficiency Unit	Efficiency	Total Cooling Output (kBtu/h)	Efficiency Unit	Efficiency	Economizer Type (if present)	Status[1]
APPARATUS ROOM HVAC	Single Zone Air Conditioner (SZAC) Air System	1	320	0	TE	0	0	N/A	NA	No Economizer	N
VRF-1	Variable Refrigerant Flow	1	135	N/A	COP	3.73	120	EER IEER	12.7 23.1	N/A	N
VRF-2	Variable Refrigerant Flow	1	135	N/A	COP	3.73	120	EER IEER	12.7 23.1	N/A	N

[1] *Status: N - New, A - Altered, E - Existing*

H3. NONRESIDENTIAL / COMMON USE AREA FAN SYSTEMS SUMMARY

01	02	03	04	05	06	07	08	09	10	11	12	13
			Supply Fan				Return / Relief Fan					
Name or Item Tag	Qty	Design OA CFM	CFM	Power	Power Units	Control	Fan Type	CFM	Power	Power Units	Control	Status[1]
APPARATUS ROOM HVAC	1	0	4,500	5	BHP	Constant Vol	N/A	N/A	N/A	N/A	N/A	N
2-DORM 1 Zone-VRF	1	0	280	0.13	BHP	Constant Vol	N/A	N/A	N/A	N/A	N/A	N
3-DORM 2 Zone-VRF	1	0	280	0.13	BHP	Constant Vol	N/A	N/A	N/A	N/A	N/A	N
4-DORM 3 Zone-VRF	1	0	280	0.13	BHP	Constant Vol	N/A	N/A	N/A	N/A	N/A	N
5-DORM 4 Zone-VRF	1	0	280	0.13	BHP	Constant Vol	N/A	N/A	N/A	N/A	N/A	N
6-DORM 5 Zone-VRF	1	0	280	0.13	BHP	Constant Vol	N/A	N/A	N/A	N/A	N/A	N
7-DORM 6 Zone-VRF	1	0	280	0.13	BHP	Constant Vol	N/A	N/A	N/A	N/A	N/A	N
8-DORM 7 Zone-VRF	1	0	280	0.13	BHP	Constant Vol	N/A	N/A	N/A	N/A	N/A	N
9-DORM 8 Zone-VRF	1	0	280	0.13	BHP	Constant Vol	N/A	N/A	N/A	N/A	N/A	N
10-DORM 9 Zone-VRF	1	0	280	0.13	BHP	Constant Vol	N/A	N/A	N/A	N/A	N/A	N
11-DORM 10 Zone-VRF	1	0	280	0.13	BHP	Constant Vol	N/A	N/A	N/A	N/A	N/A	N
12-EXERCISE ROOM Zone-VRF	1	86.62	600	0.06	BHP	Constant Vol	N/A	N/A	N/A	N/A	N/A	N
13-TELECOM ROOM-VRF	1	0	335	0.03	BHP	Constant Vol	N/A	N/A	N/A	N/A	N/A	N
14-LOBBY Zone-VRF	1	43.12	585	0.22	BHP	Constant Vol	N/A	N/A	N/A	N/A	N/A	N
15-OFFICE Zone-VRF	1	30.7	371	0.05	BHP	Constant Vol	N/A	N/A	N/A	N/A	N/A	N
16-DAY ROOM Zone-VRF	1	473.56	883	0.07	BHP	Constant Vol	N/A	N/A	N/A	N/A	N/A	N
17-KITCHEN Zone-VRF	1	48.24	883	0.07	BHP	Constant Vol	N/A	N/A	N/A	N/A	N/A	N
18-DINING Zone-VRF	1	125.64	883	0.07	BHP	Constant Vol	N/A	N/A	N/A	N/A	N/A	N
19-STATION OFFICE Zone-VRF	1	56.95	371	0.05	BHP	Constant Vol	N/A	N/A	N/A	N/A	N/A	N

[1] *Status: N - New, A - Altered, E - Existing*

H3. NONRESIDENTIAL / COMMON USE AREA FAN SYSTEMS SUMMARY

01	02	03	04	05	06	07	08	09	10	11	12	13
			Supply Fan				Return / Relief Fan					
Name or Item Tag	Qty	Design OA CFM	CFM	Power	Power Units	Control	Fan Type	CFM	Power	Power Units	Control	Status[1]
20-OFFICES/STORAGES Zone-VRF	1	189.4	600	0.06	BHP	Constant Vol	N/A	N/A	N/A	N/A	N/A	N

[1] *Status: N - New, A - Altered, E - Existing*

H5. GENERAL EXHAUST FAN SUMMARY

01	02	03	04	05	06	07	08
System ID	Zone Name	Qty	CFM	Power	Power Units	Continuous Operation?	Status[1]
ZONE 2236-EF	20-ZONE 2	1	50	0.1	BHP	No	N
APPARATUS ROOM Zone298-EF	21-APPARATUS ROOM Zone	1	7000	5	BHP	No	N

[1] *Status: N - New, A - Altered, E - Existing*

H8. SYSTEM SPECIAL FEATURES

01	02	03	04
System Name	Equipment Type	Interlocks per 140.4(n)[1]	Other Special Features and Controls
APPARATUS ROOM HVAC	Single Zone Air Conditioner (SZAC) Air System	N/A	DDC Controls Optimum Start
DHW2 - SHW	Service Hot Water	N/A	Fixed Temperature Control

Notes: This table includes controls related to the performance path only. For projects using the prescriptive path, mandatory and prescriptive controls requirements are documented on the NRCC-MCH-E.

[1] *Yes = interlocks are provided, No = interlocks are not provided, NA means no operable openings.*

H9. NONRESIDENTIAL / COMMON USE AREA & HOTEL/MOTEL VENTILATION

01	02	03	04	05	06	07
		Mechanical Ventilation				
Zone Name	Ventilation Function	# of People	Supply OA CFM	Exhaust CFM	Conditioned Area (sf)	DCV or Occupant Sensor Controls, or Both
11-EXERCISE ROOM Zone	Sports/Entertainment - Health club/weight rooms	5.77	86.62	0	577.45	N/A
12-TELECOM ROOM	General - Unoccupied	0.12	0	0	79.04	N/A
13-LOBBY Zone	Residential - Common corridors	1.44	43.12	0	287.47	N/A
14-OFFICE Zone	Office - Office space	1.02	30.7	0	204.7	N/A
15-DAY ROOM Zone	General - Conference/meeting	31.57	473.56	0	947.11	N/A
16-KITCHEN Zone	Food Service - Kitchen (cooking)	0.8	48.24	0	321.6	N/A
17-DINING Zone	Food Service - Bars, cocktail lounges	8.38	125.64	0	251.27	N/A
18-STATION OFFICE Zone	Misc - All others	1.9	56.95	0	379.67	N/A
19-OFFICES/STORAGES Zone	Residential - Common corridors	6.31	189.4	0	1262.66	N/A
20-ZONE 2	Exhaust - Shower rooms	8.77	385.99	50	1754.49	N/A
21-APPARATUS ROOM Zone	Exhaust - Auto repair rooms	20.46	0	7000	4092.9	N/A

BUILDING AND SAFETY DIVISION
Department of Public Works
FINAL ENERGY APPROVED
UNDER CGR TITLE 24, PART 1, ARTICLE 1 & PART 6
JMoon
PUBLIC WORKS
04/20/2026 10:58:02 AM
This set of plans and specifications must be kept at the job site at all times, and it is unlawful to make any changes, modifications or alterations to these plans or specifications without the prior written permission of the Building Official. The stamping of this set of plans and specifications SHALL NOT, under any circumstances, be deemed to permit or to be an approval of any work or activity that violates any provisions of any County Ordinance or State Law.

BUILDING AND SAFETY DIVISION
Department of Public Works
APPROVED
UNDER LOS ANGELES COUNTY CODE TITLE 29
JMoon
PUBLIC WORKS
04/20/2026 10:56:01 AM
This set of plans and specifications must be kept at the job site at all times, and it is unlawful to make any changes, modifications or alterations to these plans or specifications without the prior written permission of the Building Official. The stamping of this set of plans and specifications SHALL NOT, under any circumstances, be deemed to permit or to be an approval of any work or activity that violates any provisions of any County Ordinance or State Law.

WILLIAM LOYD JONES
ARCHITECT
9415 culver boulevard
culver city, california
9 0 2 3 2
TEL 310 392 3995

ADDENDUM# 3 - BID SET - APRIL 30, 2026

KHALIFEH & ASSOCIATES
CONSULTING ENGINEERS
1625 W. OLYMPIC BLVD. #791, LOS ANGELES, CA 90015
Tel: (310) 305-1555 Fax: (310) 305-1550
www.KhalifehAssociates.com
252671

REGISTERED PROFESSIONAL ENGINEER
JACK Y. KHALIFEH
No. M025454
Exp. SEPT. 2026
STATE OF CALIFORNIA

T-24 ENERGY COMPLIANCE FORMS

FIRE STATION 46
COUNTY OF LOS ANGELES FIRE DEPARTMENT
26720 BOMBERO LANE
VALENCIA, CALIFORNIA

FIVEPOINT Properties

Issue	
LACoFD APPROVED	11.MAR.25
100% DD SET	17.APR.25
FIRE DEPARTMENT SUBMITTAL SET	20.MAY.25
PLAN CHECK SUBMITTAL SET	13.AUG.25
PLAN CHECK RESUBMITTAL SET	07.NOV.25
PLAN CHECK RESUBMITTAL SET	17.DEC.25

THE ABOVE DRAWINGS AND SPECIFICATIONS AND IDEAS, DESIGNS AND ARRANGEMENTS REPRESENTED THEREBY ARE AND SHALL REMAIN THE PROPERTY OF THE ARCHITECT, AND NO PART THEREOF SHALL BE COPIED, DISCLOSED TO OTHERS OR USED IN CONNECTION WITH ANY WORK OTHER THAN THE SPECIFIC PROJECT FOR WHICH THEY WERE PREPARED AND DEVELOPED WITHOUT THE WRITTEN CONSENT OF THE ARCHITECT. VISUAL CONTACT WITH THESE DRAWINGS OR SPECIFICATIONS SHALL CONSTITUTE CONCLUSIVE EVIDENCE OF ACCEPTANCE OF THESE RESTRICTIONS.

WRITTEN DIMENSIONS ON THESE DRAWINGS SHALL HAVE PRECEDENCE OVER SCALE DIMENSIONS. CONTRACTORS SHALL VERIFY AND BE RESPONSIBLE FOR ALL DIMENSIONS AND CONDITIONS ON THE JOB. THE ARCHITECT MUST BE NOTIFIED OF ANY VARIATIONS FROM THE DIMENSIONS AND CONDITIONS SHOWN BY THESE DRAWINGS. SHOP DETAILS MUST BE SUBMITTED TO THIS OFFICE FOR APPROVAL BEFORE PROCEEDING WITH FABRICATION.
Copyright 2005

Date	17.DEC.25
Drawn	BDL
Checked	JK
Scale	NTS
Job. No.	

M0.8

Plot date : 2026-03-18

H11. ZONAL SYSTEM AND TERMINAL UNIT SUMMARY

01	02	03	04	05	06	07	08	09	10	11	12
System ID	System Type	Qty	Rated Capacity (kBtuh)		Airflow (cfm)			Fan			VSD
			Heating	Cooling	Design	Min.	Min. Ratio	Power	Power Units	Cycles	
21-APPARATUS ROOM Zone-Trm	Uncontrolled	1	N/A	N/A	4,500	N/A	0	N/A	N/A	N/A	☐
2-DORM 1 Zone-VRF	Variable Refrigerant Flow	1	5.6	6	280	N/A	N/A	0.13	BHP	Continuous	☐
3-DORM 2 Zone-VRF	Variable Refrigerant Flow	1	5.6	6	280	N/A	N/A	0.13	BHP	Continuous	☐
4-DORM 3 Zone-VRF	Variable Refrigerant Flow	1	5.6	6	280	N/A	N/A	0.13	BHP	Continuous	☐
5-DORM 4 Zone-VRF	Variable Refrigerant Flow	1	5.6	6	280	N/A	N/A	0.13	BHP	Continuous	☐
6-DORM 5 Zone-VRF	Variable Refrigerant Flow	1	5.6	6	280	N/A	N/A	0.13	BHP	Continuous	☐
7-DORM 6 Zone-VRF	Variable Refrigerant Flow	1	5.6	6	280	N/A	N/A	0.13	BHP	Continuous	☐
8-DORM 7 Zone-VRF	Variable Refrigerant Flow	1	5.6	6	280	N/A	N/A	0.13	BHP	Continuous	☐
9-DORM 8 Zone-VRF	Variable Refrigerant Flow	1	5.6	6	280	N/A	N/A	0.13	BHP	Continuous	☐
10-DORM 9 Zone-VRF	Variable Refrigerant Flow	1	5.6	6	280	N/A	N/A	0.13	BHP	Continuous	☐
11-DORM 10 Zone-VRF	Variable Refrigerant Flow	1	5.6	6	280	N/A	N/A	0.13	BHP	Continuous	☐
12-EXERCISE ROOM Zone-VRF	Variable Refrigerant Flow	1	20	18	600	N/A	N/A	0.06	BHP	Continuous	☐
13-TELECOM ROOM-VRF	Variable Refrigerant Flow	1	13.5	12	335	N/A	N/A	0.03	BHP	Continuous	☐
14-LOBBY Zone-VRF	Variable Refrigerant Flow	1	20	18	585	N/A	N/A	0.22	BHP	Continuous	☐
15-OFFICE Zone-VRF	Variable Refrigerant Flow	1	13.5	12	371	N/A	N/A	0.05	BHP	Continuous	☐
16-DAY ROOM Zone-VRF	Variable Refrigerant Flow	1	34	30	883	N/A	N/A	0.07	BHP	Continuous	☐
17-KITCHEN Zone-VRF	Variable Refrigerant Flow	1	34	30	883	N/A	N/A	0.07	BHP	Continuous	☐
18-DINING Zone-VRF	Variable Refrigerant Flow	1	34	30	883	N/A	N/A	0.07	BHP	Continuous	☐
19-STATION OFFICE Zone-VRF	Variable Refrigerant Flow	1	13.5	12	371	N/A	N/A	0.05	BHP	Continuous	☐
20-OFFICES/STORAGES Zone-VRF	Variable Refrigerant Flow	1	20	18	600	N/A	N/A	0.06	BHP	Continuous	☐

I1. WATER HEATER EQUIPMENT SUMMARY

01	02	03	04	05	06	07	08	09	10	11	12	13	14
Name	Heater Element Type	Tank Type	Qty	Tank Vol (gal)	Rated Input	Rated Input Unit	Efficiency	Efficiency Unit	Tank Insulation R-value Int/Ext	Standby Loss Fraction	1st Hr. Rating or Flow Rate (gal)	Heat Pump Type	Tank Location or Ambient Condition
AMERICAN HCG3-100T199-3N10	Natural Gas	Storage	10	100	N/A	N/A	0.9	UEF	N/A	N/A	80	N/A	N/A
AMERICAN HCG3-100T199-3N1	Natural Gas	Storage	1	100	199	kBtu/Hr	0.9	TE	N/A	0.01	N/A	N/A	N/A

I2. MULTI-FAMILY WATER HEATING SYSTEM DETAIL

01	02	03	04	05	06	07	08
System Name	Configuration	Type	Qty in System	Dwelling Unit Distribution Type	Water Heater Name	Solar Heating System	Is Compact Distribution
MF0-AMERICAN HCG3-100T199-3N1	Domestic Hot Water (DHW)	Unitary	1	HERS Verified Pipe Insulation credit	AMERICAN HCG3-100T199-3N10	N/A	No

L. DECLARATION OF REQUIRED CERTIFICATES OF INSTALLATION

Selections made by Documentation Author indicate which Certificates of Installation must be submitted for the features to be recognized for compliance. These documents must be retained and provided to the building inspector during construction and can be found online

Building Component	Form/Title
Envelope	NRCI-ENV-E - Envelope (for all buildings)
Mechanical	NRCI-MCH-E - For all buildings with Mechanical Systems
Plumbing	NRCI-PLB-E - For all buildings with Plumbing Systems
	NRCI-SAB-E - Solar Water Heating, PV and Battery Storage Systems

M. DECLARATION OF REQUIRED CERTIFICATES OF ACCEPTANCE

Selections made by Documentation Author indicate which Certificates of Acceptance must be submitted for the features to be recognized for compliance. These documents must be provided to the building inspector during construction and must be completed through an Acceptance Test Technician Certification Provider (ATTCP).

Building Component	Form/Title & System Name(s)
Envelope	NRCA-ENV-02-F - NRFC label verification for fenestration
Mechanical	NRCA-MCH-02-A - Outdoor Air must be submitted for all newly installed HVAC units. Note: MCH-02-A can be performed in conjunction with MCH-07-A Supply Fan VFD Acceptance (if applicable) since testing activities overlap
	APPARATUS ROOM HVAC
Mechanical	NRCA-MCH-03-A - Constant Volume Single Zone HVAC
	APPARATUS ROOM HVAC
Mechanical	NRCA-MCH-04(a)-H - Air Distribution Duct Leakage - HERS Verification required
	APPARATUS ROOM HVAC

N. DECLARATION OF REQUIRED CERTIFICATES OF VERIFICATION

Selections made by Documentation Author indicate which Certificates of Verification must be submitted for the features to be recognized for compliance. These documents must be retained and provided to the building inspector during construction and can be found online

There are no Certificates of Verification applicable to this project

Documentation Author's Declaration Statement

1. I certify that this Certificate of Compliance documentation is accurate and complete.

Documentation Author Name:	Documentation Author Signature:
Company: Khalifeh & Associates. Inc.	Signature Date:
Address:	CEA/HERS Certification Identification (if applicable):
City/State/Zip: ,	Phone:

Responsible Person's Declaration statement

I certify the following under penalty of perjury, under the laws of the State of California:

1. The information provided on this Certificate of Compliance is true and correct.
2. I am eligible under Division 3 of the Business and Professions Code to accept responsibility for the building design or system design identified on this Certificate of Compliance (responsible designer)
3. The energy features and performance specifications, materials, components, and manufactured devices for the building design or system design identified on this Certificate of Compliance conform to the requirements of Title 24, Part 1 and Part 6 of the California Code of Regulations.
4. The building design features or system design features identified on this Certificate of Compliance are consistent with the information provided on other applicable compliance documents, worksheets, calculations, plans and specifications submitted to the enforcement agency for approval with this building permit application.
5. I understand that a registered copy of this Certificate of Compliance shall be made available with the building permit(s) issued for the building, and made available to the enforcement agency for all applicable inspections, and I will take the necessary steps to accomplish this requirement.
6. I understand that a registered copy of this Certificate of Compliance is required to be included with the documentation the builder provides to the building owner at occupancy, and I will take the necessary steps to accomplish these requirements.

Responsible Designer Name:	Responsible Designer Signature:	
Company: William Loyd Jones Architect	Date Signed: 6 Dec. 2025	
Address: 9415 Culver Boulevard	License #: C 13911	
City/State/Zip: Culver City, CA 90232	Title: ARCHITECT	Scope: ARCHITECTURAL
Phone: 310.392.3995		
Responsible Designer Name: Jack Khalifeh, PE	Responsible Designer Signature: Jack Khalifeh	
Company: Khalifeh & Associates, Inc.	Date Signed: 12/17/2025	
Address: 1625 W Olympic Blvd. #791	License #: M025454	
City/State/Zip: Los Angeles, CA 90015	Title: PRINCIPAL	Scope: MECHANICAL
Phone: 310.305.1555		

BUILDING AND SAFETY DIVISION
Department of Public Works
FINAL ENERGY APPROVED
UNDER CGR TITLE 24, PART 1, ARTICLE 1 & PART 6
JMOON
PUBLIC WORKS
04/20/2026 10:58:02 AM
This set of plans and specifications must be kept at the job site at all times, and it is unlawful to make any changes, modifications or alterations to these plans or specifications without the prior written permission of the Building Official. The stamping of this set of plans and specifications SHALL NOT, under any circumstances, be deemed to permit or to be an approval of any work or activity that violates any provisions of any County Ordinance or State Law

BUILDING AND SAFETY DIVISION
Department of Public Works
APPROVED
UNDER LOS ANGELES COUNTY CODE TITLE 29
JMOON
PUBLIC WORKS
04/20/2026 10:56:01 AM
This set of plans and specifications must be kept at the job site at all times, and it is unlawful to make any changes, modifications or alterations to these plans or specifications without the prior written permission of the Building Official. The stamping of this set of plans and specifications SHALL NOT, under any circumstances, be deemed to permit or to be an approval of any work or activity that violates any provisions of any County Ordinance or State Law

WILLIAM LOYD JONES ARCHITECT
9415 culver boulevard
culver city, california
9 0 2 3 2
TEL 310 392 3995

ADDENDUM# 3 - BID SET - APRIL 30, 2026

KHALIFEH & ASSOCIATES
CONSULTING ENGINEERS
1625 W. OLYMPIC BLVD. #791, LOS ANGELES, CA 90015
Tel: (310) 305-1555 Fax: (310) 305-1550
www.KhalifehAssociates.com
252671

REGISTERED PROFESSIONAL ENGINEER
JACK Y. KHALIFEH
No. M025454
Exp. SEPT. 2026
STATE OF CALIFORNIA

T-24 ENERGY COMPLIANCE FORMS

FIRE STATION 46
COUNTY OF LOS ANGELES FIRE DEPARTMENT
26720 BOMBERO LANE
VALENCIA, CALIFORNIA

FIVEPOINT Project

Issue	
LACoFD APPROVED	11.MAR.25
100% DD SET	17.APR.25
FIRE DEPARTMENT SUBMITTAL SET	20.MAY.25
PLAN CHECK SUBMITTAL SET	13.AUG.25
PLAN CHECK RESUBMITTAL SET	07.NOV.25
PLAN CHECK RESUBMITTAL SET	17.DEC.25

THE ABOVE DRAWINGS AND SPECIFICATIONS AND IDEAS, DESIGNS AND ARRANGEMENTS REPRESENTED THEREBY ARE AND SHALL REMAIN THE PROPERTY OF THE ARCHITECT, AND NO PART THEREOF SHALL BE COPIED, DISCLOSED TO OTHERS OR USED IN CONNECTION WITH ANY WORK OTHER THAN THE SPECIFIED PROJECT FOR WHICH THEY HAVE BEEN PREPARED AND DEVELOPED WITHOUT THE WRITTEN CONSENT OF THE ARCHITECT. USE IN CONTRACT WITH THESE DRAWINGS OR SPECIFICATIONS SHALL CONSTITUTE CONCLUSIVE EVIDENCE OF ACCEPTANCE OF THESE RESTRICTIONS.

WRITTEN DIMENSIONS ON THESE DRAWINGS SHALL HAVE PRECEDENCE OVER SCALED DIMENSIONS. CONTRACTORS SHALL VERIFY AND BE RESPONSIBLE FOR ALL DIMENSIONS AND CONDITIONS. THE ARCHITECT SHALL BE NOTIFIED OF ANY VARIATIONS FROM THE DIMENSIONS AND CONDITIONS SHOWN BY THESE DRAWINGS. SHOP DETAILS MUST BE SUBMITTED TO THIS OFFICE FOR APPROVAL BEFORE PROCEEDING WITH FABRICATION.

Copyright 2005

Date	17.DEC.25
Drawn	BDL
Checked	JK
Scale	NTS
Job. No.	

M0.9

Plot date : 2026-03-18

FIRE STATION 46 MINIMUM VENTILATION RATES CALCULATION

REQUIRED VENTILATION RATES (2022 CMC SEC. 403.2.1 EQUATION 403.2.1: TABLE 402.1) AND 2022 ASHRAE 62.1:6.2.2 TABLE 6-1 EQUATION 6-1 USING AREA METHOD Vbz = (Rp x Pz) + (Ra x Az)							REQUIRED VENTILATION RATES (2022 CEC : TABLE 120.1-A USING EQUATIONS 120.1-F (Vz = Rt x Az)			ACTUAL CFM (PROVIDED) SEE NOTES (1)
ROOM NAME	FLOOR	Rp (CFM/OCC.)	Pz (OCC./1000 FT2)	Ra (CFM/FT2)	AZ (FT2)	Vbz (MIN. CFM)	Ra (CFM/FT2)	AZ (FT2)	Vbz (MIN. CFM)	
DORM 1	FIRST FLOOR	5	1	0.06	144	12	0.15	144	22	30
DORM 2	FIRST FLOOR	5	1	0.06	146	12	0.15	146	22	30
DORM 3	FIRST FLOOR	5	1	0.06	145	12	0.15	145	22	30
DORM 4	FIRST FLOOR	5	1	0.06	146	14	0.15	146	22	30
DORM 5	FIRST FLOOR	5	1	0.06	145	14	0.15	145	22	30
DORM 6	FIRST FLOOR	5	1	0.06	145	12	0.15	145	22	30
DORM 7	FIRST FLOOR	5	1	0.06	145	12	0.15	145	22	30
DORM 8	FIRST FLOOR	5	1	0.06	145	16	0.15	145	22	30
DORM 9	FIRST FLOOR	5	1	0.06	145	12	0.15	145	22	30
DORM 10	FIRST FLOOR	5	1	0.06	145	14	0.15	145	22	30
HALLWAY	FIRST FLOOR	0	0	0.06	741	44	0.15	741	111	110
EXERCISE ROOM	FIRST FLOOR	20	6	0.06	552	144	0.15	552	83	150
PARAMEDIC SUPPLY RM.	FIRST FLOOR	5	3	0.06	146	24	0.15	146	22	30
HOUSE JAN/STORAGE	FIRST FLOOR	5	2	0.06	142	19	0.15	142	21	30
LOBBY	FIRST FLOOR	5	5	0.06	188	36	0.5	188	94	100
STATION OFFICE	FIRST FLOOR	5	6	0.06	856	81	0.15	856	128	130
COPY ROOM	FIRST FLOOR	5	2	0.06	85	15	0.15	85	13	20
CENTRAL/STORAGE	FIRST FLOOR	5	2	0.06	168	20	0.15	168	25	30
DAY ROOM	FIRST FLOOR	5	30	0.06	990	209	0.15	990	149	350
DINING ROOM	FIRST FLOOR	5	20	0.06	256	115	0.5	256	128	130
KITCHEN	FIRST FLOOR	7.5	10	0.12	330	115	0.15	330	50	120

NOTE:
1. ACTUAL CFM IS BASED ON WHICHEVER IS LARGER BETWEEN Vbz & Vz.

MINIMUM EXHAUST RATES CALCULATION

REQUIRED EXHAUST RATE (2022 CMC SEC. 403, TABLE 403.7)					ACTUAL CFM (PROVIDED)
ROOM NAME	FLOOR	QA RATE (RA)	AREA (AZ)	MIN. CFM (VZ)	
ELECTRICAL ROOM	FIRST FLOOR	1.5	98	147	300
OIL ROOM	FIRST FLOOR	1.5	183	274.5	400
AIR FILL ROOM	FIRST FLOOR	1.5	105	157.5	250
EXERCISE ROOM	FIRST FLOOR	0.5	552	276	600
HOUSE/JAN/STORAGE	FIRST FLOOR	1	142	142	150
TURN OUT STORAGE ROOM	FIRST FLOOR	1	374	374	400
WORK RM.	FIRST FLOOR	1	214	214	215
UTIL/SVC SINK ROOM	FIRST FLOOR	1	106	106	150

BUILDING AND SAFETY DIVISION
Department of Public Works
FINAL ENERGY APPROVED
UNDER CCR TITLE 24, PART 1, ARTICLE 1 & PART 6
JMoon
PUBLIC WORKS
04/20/2026 10:58:02 AM
This set of plans and specifications must be kept at the job site at all times, and it is unlawful to make any changes, modifications or additions to these plans or specifications without the prior written permission of the Building Official. The stamping of this set of plans and specifications SHALL NOT, under any circumstances, be deemed to permit or to be an approval of any work or activity that violates any provisions of any County Ordinance or State Law

BUILDING AND SAFETY DIVISION
Department of Public Works
APPROVED
UNDER LOS ANGELES COUNTY CODE TITLE 29
JMoon
PUBLIC WORKS
04/20/2026 10:56:01 AM
This set of plans and specifications must be kept at the job site at all times, and it is unlawful to make any changes, modifications or additions to these plans or specifications without the prior written permission of the Building Official. The stamping of this set of plans and specifications SHALL NOT, under any circumstances, be deemed to permit or to be an approval of any work or activity that violates any provisions of any County Ordinance or State Law

WILLIAM LOYD JONES ARCHITECT
9415 culver boulevard
culver city, california
9 0 2 3 2
TEL 310 392 3995

ADDENDUM# 3 - BID SET - APRIL 30, 2026

KHALIFEH & ASSOCIATES
CONSULTING ENGINEERS
1625 W. OLYMPIC BLVD. #791, LOS ANGELES, CA 90
Tel: (310) 305-1555 Fax: (310) 305-1550
www.KhalifehAssociates.com
252671
REGISTERED PROFESSIONAL ENGINEER JACK Y. KHALIFEH No. M025454 Exp. SEPT. 2026 STATE OF CALIFORNIA

MINIMUM VENTILATION RATES CALCULATION

FIRE STATION 46
COUNTY OF LOS ANGELES FIRE DEPARTMENT
26720 BOMBERO LANE
VALENCIA, CALIFORNIA

FIVEPOINT Los Angeles

Issue	
LACoFD APPROVED	11.MAR.25
100% DD SET	17.APR.25
FIRE DEPARTMENT SUBMITTAL SET	20.MAY.25
PLAN CHECK SUBMITTAL SET	13.AUG.25
PLAN CHECK RESUBMITTAL SET	07.NOV.25
PLAN CHECK RESUBMITTAL SET	17.DEC.25

THE ABOVE DRAWINGS AND SPECIFICATIONS AND SERVICE DESIGNS AND ARRANGEMENTS ARE THE EXCLUSIVE PROPERTY OF THE ARCHITECT AND THE PROPERTY OF THE ARCHITECT, AND NO PART THEREOF SHALL BE COPIED, DISCLOSED TO OTHERS OR USED IN CONNECTION WITH ANY WORK OR PROJECT OTHER THAN THE PROJECT FOR WHICH THEY HAVE BEEN PREPARED AND DELIVERED WITHOUT THE WRITTEN CONSENT OF THE ARCHITECT. ANY CONTACT WITH THESE DRAWINGS OR SPECIFICATIONS SHALL CONSTITUTE CONCLUSIVE EVIDENCE OF ACCEPTANCE OF THESE RESTRICTIONS.

WRITTEN DIMENSIONS ON THESE DRAWINGS SHALL HAVE PRECEDENCE OVER SCALED DIMENSIONS. CONTRACTORS SHALL VERIFY AND BE RESPONSIBLE FOR ALL DIMENSIONS AND CONDITIONS ON THE JOB AND THIS OFFICE MUST BE NOTIFIED OF ANY VARIATION AFFECTING THE STRUCTURE WHERE SHOWN ON THESE DRAWINGS. SHOP DETAILS MUST BE SUBMITTED TO THIS OFFICE FOR APPROVAL BEFORE PROCEEDING WITH FABRICATION.

Copyright 2005

Date	17.DEC.25
Drawn	BDL
Checked	JK
Scale	NTS
Job. No.	

M0.10

Plot date : 2026-03-18

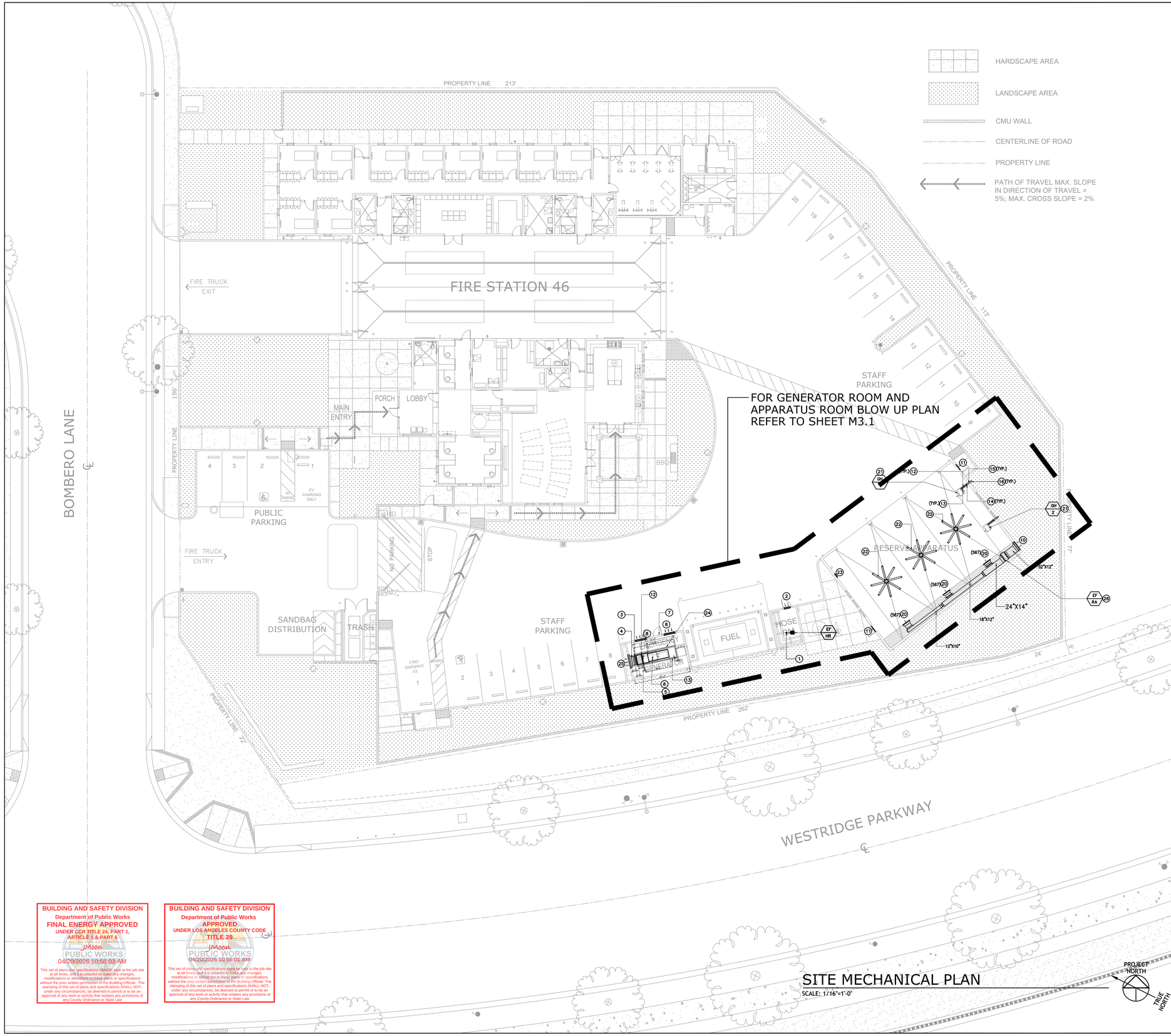

SITE MECHANICAL PLAN
SCALE: 1/16"=1'-0"

BUILDING AND SAFETY DIVISION
Department of Public Works
FINAL ENERGY APPROVED
UNDER CGR TITLE 24, PART 1, ARTICLE 1 & PART 6
JMoon
PUBLIC WORKS
04/20/2026 10:56:03 AM
This set of plans and specifications must be kept at the job site at all times, and it is unlawful to make any changes, modifications or alterations to these plans or specifications without the prior written permission of the Building Official. The stamping of this set of plans and specifications SHALL NOT, under any circumstances, be deemed to permit or to be an approval of any work or activity that violates any provisions of any County Ordinance or State Law

BUILDING AND SAFETY DIVISION
Department of Public Works
APPROVED
UNDER LOS ANGELES COUNTY CODE TITLE 29
JMoon
PUBLIC WORKS
04/20/2026 10:56:01 AM
This set of plans and specifications must be kept at the job site at all times, and it is unlawful to make any changes, modifications or alterations to these plans or specifications without the prior written permission of the Building Official. The stamping of this set of plans and specifications SHALL NOT, under any circumstances, be deemed to permit or to be an approval of any work or activity that violates any provisions of any County Ordinance or State Law

KEYNOTES

1. 8"Ø EXHAUST DUCT UP THRU ROOF. PROVIDE ROOF CAP ON 6" HIGH ROOF CURB. VERIFY EXACT LOCATION WITH ARCHITECT.
2. PROVIDE DOOR LOUVER. PROVIDE MIN. 0.4 SQ. FT. OF FREE AREA (200 CFM). VERIFY EXACT SIZE AND LOCATION WITH THE ARCHITECT.
3. PROVIDE FLEXIBLE CONNECTION (FLEXIBLE BELLOWS).
4. EXTEND EXHAUST DUCT. DUCT SIZE PER LOAD BANK OUTLET DUCT OPENING. PROVIDE REQUIRED TRANSITION TO CONNECT TO WALL MOUNTED LOUVER WITH INTEGRAL BACKDRAFT DAMPER AND 1/16" MESH SCREEN. VERIFY EXACT SIZE AND LOCATION WITH THE ARCHITECT.
5. 4"Ø POSITIVE PRESSURE VENT PIPE FROM THE GENERATOR EXHAUST OUTLET AND CONNECT TO DPF (SDPF-2-H-CS-BITO-6/6-LP. PROVIDE FLEXIBLE TUBING. COMPLY WITH MANUFACTURER'S INSTALLATION LISTING REQUIREMENTS.
6. EXTEND WELDED SCHEDULE 40 BLACK STEEL ENGINE EXHAUST VENT PIPE FROM DPF TO 2 FT. ABOVE ROOF LEVEL. VERIFY EXACT LOCATION WITH ARCHITECT. PROVIDE THIMBLE AT PENETRATION THRU THE ROOF. RAIN CAP TO BE PROVIDED BY GENERATOR MANUFACTURER. (REFER TO ELECTRICAL PLANS) PROVIDE CONDENSATE DRAIN TRAP AND PLUG WHERE PIPING TURNS TO RISE VERTICALLY.
7. PROVIDE FULLY LOUVERED DOOR. PROVIDE NET FREE AREA OF 10 SQ. FT. VERIFY EXACT SIZE WITH ARCHITECT.
8. WALL MOUNTED LOUVER. PROVIDE 6.5 SQ. FT. OF FREE AREA OR 48"X36" POTTORFF LOUVER . VERIFY EXACT SIZE AND LOCATION WITH ARCHITECT. PROVIDE ¼" INSECT SCREEN.
9. EXHAUST PIPING TO BE THERMALLY INSULATED. PROVIDE CONDENSATE DRAIN. THE DPF HOUSING SHALL BE SUPPORTED WITH AT LEAST 2 BEAMS RUNNING UNDERNEATH THE FEET. COMPLY WITH MANUFACTURER'S INSTALLATION LISTING REQUIREMENTS AND COORDINATE WITH STRUCTURAL ENGINEER.
10. HIGH WALL MOUNTED EXHAUST AIR LOUVER WITH ¼" INSECT SCREEN. VERIFY EXACT SIZE AND LOCATION WITH THE ARCHITECT. PROVIDE 3.4 FT2 OF FREE AREA.
11. PROVIDE FULLY LOUVERED DOOR OR DOOR LOUVER WITH MIN. 1.7 SQ. FT. OF FREE AREA. PROVIDE INSECT SCREEN. VERIFY EXACT SIZE AND LOCATION WITH THE ARCHITECT.
12. BOLT TOGETHER LOAD BANK BY GENERATOR MANUFACTURER. THE 100KW LOAD BANK WILL BE MOUNTED ON THE GENSET'S 172-INCH BELLY TANK, WITHOUT INCREASING THE OVERALL SYSTEM LENGTH.THE VENDOR WILL FACTORY-CONNECT THE LOAD BANK TO THE GENERATOR RADIATOR WITH A 3-INCH CONNECTION FIELD VERIFICATION OF SHOP DRAWINGS IS REQUIRED BEFORE POURING THE CONCRETE HOUSEKEEPING PAD.
13. BELLY TANK AND ASSOCIATED ACCESSORIES BY GENERATOR MANUFACTURER.
14. FACTORY SUPPLIED CONCENTRIC VENT ADAPTER. SEE DETAIL #1 ON SHEET M4.7
15. FACTORY SUPPLIED INLET GUARD ASSEMBLY, SEE DETAIL #1 ON SHEET M4.7
16. FACTORY SUPPLIED VENT TERMINAL ASSEMBLY (ELBOW). SEE DETAIL #1 ON SHEET M4.7
17. CONTRACTOR TO MAKE SURE THE MEANS OF SUSPENSION IS ADEQUATE TO SUPPORT THE WEIGHT OF THE UNITS. COORDINATE WITH STRUCTURAL ENGINEER AND VERIFY EXACT LOCATION WITH THE ARCHITECT.
18. INSTALL HEATER 11 FT. UP TO MAX. OF 12 FT. A.F.F. COORDINATE EXACT LOCATION WITH THE ARCHITECT.
19. PROVIDE CONDENSATE DRAIN PIPE. REFER TO PLUMBING PLAN FOR EXACT ROUTING ON THE FIELD.
20. 36"X8" (567 CFM) HIGH SIDEWALL EXHAUST REGISTER WITH MVD SET @567 CFM. KRUEGER MODEL S580H 0° DEFLECTION VERIFY EXACT SIZE & LOCATION WITH ARCHITECT.
21. FURNISH ALL NECESSARY COMPONENTS FOR A COMPLETE AND SECURE INSTALLATION. INSTALL IN FULL COMPLIANCE WITH THE MANUFACTURER'S INSTALLATION GUIDELINES. COORDINATE WITH THE STRUCTURAL ENGINEER TO VERIFY AND PROVIDE APPROPRIATE STRUCTURAL SUPPORT AND ATTACHMENT DETAILS TO ENSURE THE GAS HEATER IS SAFELY SUPPORTED BY THE BUILDING STRUCTURE.
22. BIG ASS FANS E SERIES HVLS CEILING FAN MODEL E12 (12 FT DIAMETER). 82.2 LB, 85 RPM, INPUT POWER AND BREAKER: 100-125 VAC, 50/60 HZ, 10A. SOUND AT MAXIMUM SPEED <35dBA. FURNISH ALL NECESSARY COMPONENTS FOR A COMPLETE AND SECURE INSTALLATION, INCLUDING BUT NOT LIMITED TO UPPER MOUNT AND UPPER MOUNTING BRACE, EXTENSION TUBE AND SAFETY CABLE, ANGLE IRON OR ANY ADDITIONAL STRUCTURAL SUPPORTS AS REQUIRED. INSTALL IN FULL COMPLIANCE WITH THE MANUFACTURER'S INSTALLATION GUIDELINES. FURNISH WIRED WALL CONTROLLER TO WALL SURFACE. COORDINATE WITH THE STRUCTURAL ENGINEER TO VERIFY AND PROVIDE APPROPRIATE STRUCTURAL SUPPORT AND ATTACHMENT DETAILS TO ENSURE THE FAN IS SAFELY SUPPORTED BY THE BUILDING STRUCTURE.
23. PROPOSED CONTROLLER LOCATION FOR CEILING FANS AND GAS HEATER. COORDINATE EXACT LOCATION WITH THE OWNER'S REPRESENTATIVE.
24. PROVIDE 6" HIGH CONCRETE PAD. TO BE 4" LARGER THAN THE FOOTPRINT OF BELLY TANK.
25. PROVIDE 18.0. SQ. FT. OF FREE AREA EXHAUST LOUVER OR 60" WIDE X 72" HIGH POTTORFF LOUVER. PROVIDE SHEET METAL PLENUM BEHIND LOUVER.
26. PROVIDE ACCESS PANEL BELOW THE FAN.

GENERAL NOTES

1. ALL DEBRIS SHALL BE DISPOSED OF IN AN APPROVED MANNER.
2. VERIFY THERMOSTAT/CONTROL LOCATION WITH ARCHITECT.
3. VERIFY EXACT LOCATION OF ALL SUPPLY, RETURN AND EXHAUST GRILLES, REGISTERS, GRILLES AND DIFFUSERS WITH INTERIOR DESIGNER AND ARCHITECT.
4. ALL HVAC DUCT SYSTEM SHALL CONSTRUCTED, INSTALLED AND INSULATED AS PROVIDED IN CHAPTER 6 OF CMC, 2022.
5. ALL HVAC EQUIPMENT SHALL BE APPROVED PRIOR TO INSTALLATION BY NATIONALLY RECOGNIZED STANDARDS AND EVIDENCED BY THE LISTING AND LABEL OF AN APPROVED AGENCY (CMC 302.1)
6. APPLIANCES DESIGNED TO BE FIXED IN POSITION SHALL BE SECURELY FASTENED IN PLACE, CMC 304.4.
7. PROVIDE TURNING VANES AT ELBOWS.
8. DUCT SYSTEMS USED WITH BLOWER TYPE EQUIPMENT WHICH ARE PORTIONS OF A HEATING, COOLING, ABSORPTION, EVAPORATIVE COOLING OR OUTDOOR AIR VENTILATION SYSTEM SHALL BE SIZED IN ACCORDANCE WITH CHAPTER 17 OF THE MECHANICAL CODE.
9. DUCT SIZES GIVEN ON THE PLAN ARE NET CLEAR INSIDE DIMENSIONS. ADD THICKNESS OF INSULATIONS TO OBTAIN THE ACTUAL DUCT SIZES (+2" ALL AROUND).
10. MAINTAIN MINIMUM OF 10 FEET SEPARATION BETWEEN OSA INTAKE HOOD OF MUA AND EXHAUST OUTLET OR PLUMBING VENT.
11. ALL NEW DUCTWORK SHALL BE PRESSURE TESTED BEFORE PROVIDING DUCTWORK INSULATION. CHECK AND REPAIR FOR LEAKS.
12. DUCT AIR LEAKAGE SHALL BE TESTED AND VERIFIED BY HERS RATER.
13. PROVIDE YOUNG REGULATORS REMOTE OPERATOR DAMPER WHERE CEILING IS NON-ACCESSIBLE.
14. PROVIDE A MINIMUM OF 15 C.F.M. OF OUTSIDE AIR PER OCCUPANT IN ALL PORTIONS OF THE BUILDING DURING SUCH TIME AS THE BUILDING IS OCCUPIED.

WILLIAM LOYD JONES
ARCHITECT
9415 culver boulevard
culver city, california
9 0 2 3 2
TEL 310 392 3995

ADDENDUM# 3 - BID SET - APRIL 30, 2026

KHALIFEH & ASSOCIATES
CONSULTING ENGINEERS
1625 W, OLYMPIC BLVD, #791, LOS ANGELES, CA 90
Tel: (310) 305-1555 Fax: (310) 305-1550
www.KhalifehAssociates.com
252671

REGISTERED PROFESSIONAL ENGINEER JACK Y. KHALIFEH No. M025454 Exp. SEPT. 2026 STATE OF CALIFORNIA

SITE MECHANICAL PLAN

FIRE STATION 46
COUNTY OF LOS ANGELES FIRE DEPARTMENT
26720 BOMBERO LANE
VALENCIA, CALIFORNIA

FIVEPOINT Los Angeles

Issue	
LACoFD APPROVED	11.MAR.25
100% DD SET	17.APR.25
FIRE DEPARTMENT SUBMITTAL SET	20.MAY.25
PLAN CHECK SUBMITTAL SET	13.AUG.25
PLAN CHECK RESUBMITTAL SET	07.NOV.25
PLAN CHECK RESUBMITTAL SET	17.DEC.25

THE ABOVE DRAWINGS AND SPECIFICATIONS AND IDEAS, DESIGNS AND ARRANGEMENTS REPRESENTED THEREIN ARE AND SHALL REMAIN THE PROPERTY OF THE ARCHITECT, AND NO PART THEREOF SHALL BE COPIED, DISCLOSED TO OTHERS OR USED IN CONNECTION WITH ANY WORK OR PROJECT OTHER THAN THE SPECIFIED PROJECT FOR WHICH THEY HAVE BEEN PREPARED AND DEVELOPED WITHOUT THE WRITTEN CONSENT OF THE ARCHITECT. USE OR CONTACT WITH THESE DRAWINGS OR SPECIFICATIONS SHALL CONSTITUTE CONCLUSIVE EVIDENCE OF ACCEPTANCE OF THESE RESTRICTIONS.

WRITTEN DIMENSIONS ON THESE DRAWINGS SHALL HAVE PRECEDENCE OVER SCALE DIMENSIONS. CONTRACTOR SHALL VERIFY AND BE RESPONSIBLE FOR ALL DIMENSIONS AND CONDITIONS ON THE JOB AND THIS OFFICE MUST BE NOTIFIED OF ANY VARIATIONS FROM THE DIMENSIONS AND CONDITIONS SHOWN BY THESE DRAWINGS. SHOP DETAILS MUST BE SUBMITTED TO THIS OFFICE FOR APPROVAL BEFORE PROCEEDING WITH FABRICATION.
Copyright 2005

Date	17.DEC.25
Drawn	BD
Checked	JK
Scale	1/16" = 1'-0"
Job. No.	

M1.0

Plot date : 2026-03-18

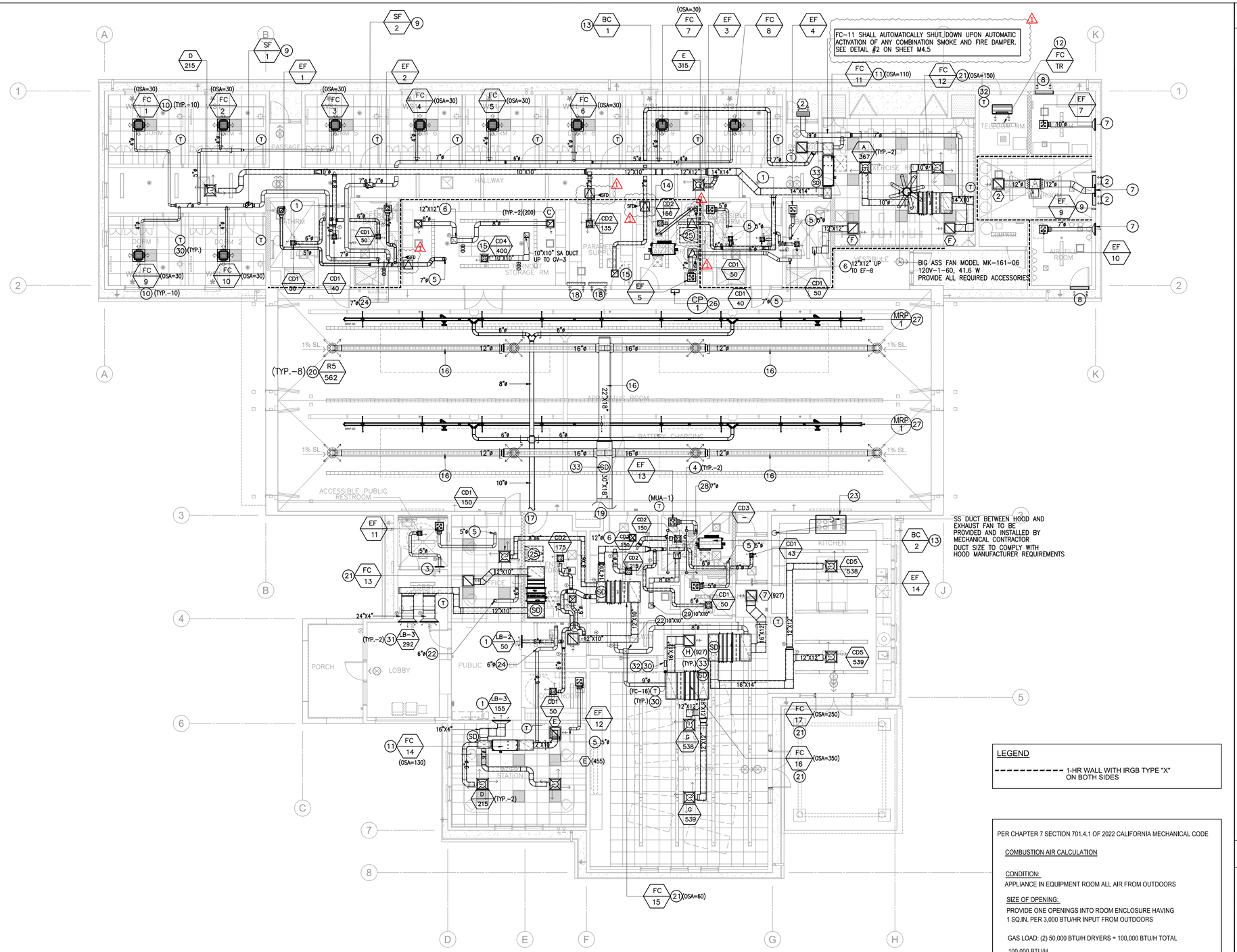

KEYNOTES

1. DUCT PENETRATING THE CORRIDOR IS CONSTRUCTED OF STEEL NOT LESS THAN 0.019 INCH. THICK (26 gauge) AND THERE ARE NO OPENING SERVING THE CORRIDOR PER 2022 CBC 717.5.4.1 EXCEPTIONS 2.
2. PROVIDE LOW DOOR LOUVER WITH INSECT SCREEN. PROVIDE 24"X8" DOOR LOUVER. INSTALL 12" A.F.F. VERIFY EXACT LOCATION WITH THE ARCHITECT.
3. 20"X8" HIGH WALL LINEAR BAR TRANSFER AIR REGISTER. VERIFY EXACT SIZE AND LOCATION WITH ARCHITECT. PROVIDE ANEMOSTAT AL-1.
4. 4"Ø DRYER EXHAUST DUCT CONNECTION TO DOMESTIC DRYER EXHAUST DUCT UP THRU ROOF. PROVIDE ERIFY POINT OF TERMINATION THRU THE ROOF WITH ARCHITECT.
5. RIGID ALUMINUM TOILET/JANITOR STORAGE EXHAUST DUCT UTR. PROVIDE ROOF JACK ON 6" HIGH ROOF CURB. VERIFY POINT OF TERMINATION THRU THE ROOF WITH ARCHITECT.
6. EXHAUST DUCT UP AND CONINECT TO EXHAUST FAN ON THE ROOF. PROVIDE DUCT TRANSITION AS REQUIRED. PROVIDE FACTORY SUPPLIED 12" HIGH MIN. ROOF CURB. VERIFY POINT OF TERMINATION THRU THE ROOF WITH ARCHITECT.
7. PROVIDE HIGH WALL EXHAUST AIR LOUVER, PROVIDE 0.8 SQ. FT. OF FREE AREA OR PROVIDE 24"X10" WITH INSECT SCREEN. REFER TO ARCH. SHEET A4.1 FOR EXACT LOCATION OF EXHAUST LOUVER.
8. PROVIDE HIGH WALL MAKE UP AIR LOUVER, 36"X12" WITH FIELD FABRICATED FILTER RACK, ACCESSIBLE FROM THE INSIDE. PROVIDE 2" WASHABLE AIR FILTER TO FIT. VERIFY EXACT LOCATION WITH THE ARCHITECT.
9. PROVIDE CEILING ACCESS PANEL BELOW THE FAN FOR FUTURE SERVICING. PROVIDE FACTORY SUPPLIED SC-70 SET (4) SPRING CEILING ISOLATORS.
10. 2'X2' 4-WAY CEILING RECESSED CASSETTE FAN COIL WITH INTEGRAL CONDENSATE DRAIN PUMP. PROVIDE ¾" COPPER TYPE "M" CONDENSATE DRAIN PIPE. REFER TO PLUMBING PLAN FOR EXACT ROUTING OF CONDENSATE DRAIN PIPE.
11. MULTIPOISE FAN COIL. PROVIDE CONDENSATE DRAIN PUMP. PROVIDE ¾" COPPER TYPE "M" CONDENSATE DRAIN PIPE. REFER TO PLUMBING PLAN FOR EXACT ROUTING OF CONDENSATE DRAIN PIPE.
12. 1-WAY CEILING RECESSED CASSETTE FAN COIL WITH INTEGRAL CONDENSATE DRAIN PUMP. PROVIDE ¾" COPPER TYPE "M" CONDENSATE DRAIN PIPE. REFER TO PLUMBING PLAN FOR EXACT ROUTING OF CONDENSATE DRAIN PIPE.
13. PROVIDE STAINLESS STEEL DRAIN PAN BELOW BC CONTROLLER. PROVIDE CONDENSATE DRAIN PUMP. PROVIDE ¾" COPPER TYPE "M" CONDENSATE DRAIN PIPE. REFER TO PLUMBING PLAN FOR EXACT ROUTING OF CONDENSATE DRAIN PIPE. INSTALL BC BELOW THE CEILING. IF IT IS INSTALL ABOVE THE CEILING A TRANSFER GRILLE MUST BE INSTALL BELOW THE BC TO COMPLY WITH ASHRAE 15-2024.
14. 4"Ø CPVC FLUE AND COMBUSTION AIR UP THRU ROOF. COMPLY WITH MANUFACTURER LISTING, PROVIDE TERMINATION KIT. VERIFY EXACT LOCATION OF PENETRATION WITH ARCHITECT.
15. TRANSFER GRILLE.
16. INSTALL SPIRAL DUCT IN A NEAT MANNER. INSTALL AS HIGH AS POSSIBLE BELOW THE APPARATUS ROOM STRUCTURE FRAMING. VERIFY EXACT LOCATION WITH THE ARCHITECT.
17. ENGINE EXHAUST DUCT TO GARAGE EXHAUST FAN ON THE ROOF TO BE SUPPLIED AND INSTALLED BY CERTIFIED INSTALLER. FOR CONTINUATION. SEE SHEET M2.1.
18. PROVIDE 36"X48" HIGH WALL MOUNTED EXHAUST AIR LOUVER WITH INTEGRAL BACKDRAFT DAMPER. THE LOUVER SHALL HAVE A MIN. FREE AREA OF 4.3 SQ. FT. (2150 CFM) EACH. SEE ARCHITECTURAL PLAN FOR EXACT SIZE AND LOCATION OF LOUVERS. MOUNT A WHITE GRILLE INSIDE WITH A FLANGE. FOR CONTINUATION SEE SHEET M2.1.
19. MAKE UP AIR DUCT TO MAKE-UP AIR FAN ON ROOF. SEE M2.1 FOR CONTINUATION.
20. PROVIDE VOLUME DAMPER DIRECTLY OFF BRANCH DUCT AND AIRCRAFT SAFETY CABLE AT EACH REGISTER. INSTALL DUCT I N A NEAT MANNER.
21. HORIZONTAL CEILING CONCEALED FAN COIL WITH INTEGRAL CONDENSATE DRAIN PUMP. PROVIDE ¾" COPPER TYPE "M" CONDENSATE DRAIN PIPE. REFER TO PLUMBING PLAN FOR EXACT ROUTING OF CONDENSATE DRAIN PIPE.
22. OUTSIDE SUPPLY AIR DUCT UTR AND TERMINATE TO GV-2 ON 6" HIGH ROOF CURB. VERIFY POINT OF TERMINATION THRU THE ROOF WITH ARCHITECT. .
23. PROVIDE STAINLESS STEEL RESIDENTIAL RANGE HOOD WITH INTERNALLY MOUNTED LAMPS, SWITCH AND GREASE FILTERS. PROVIDE SS EXHAUST DUCT. DUCT SIZE TO COMPLY WITH HOOD MANUFACTURER'S REQUIREMENTS. REFER TO ARCHITECT SPECS.
24. OUTSIDE SUPPLY AIR DUCT UTR. PROVIDE ROOF JACK ON 6" HIGH ROOF CURB. VERIFY POINT OF TERMINATION THRU THE ROOF WITH ARCHITECT. .
25. PERMANENT ROOF ACCESS TO ROOF EQUIPMENT. SEE ARCHITECTURAL PLAN FOR DETAIL.
26. PLYMOVENT OS-3 CONTROL PANEL TO MATCH FAN. INSTALL CONTROL PANEL 60" A.F.F.VERIFY EXACT LOCATION ON THE FILED WITH OWNER'S REPRESENTATIVE.
27. MRP-90-2-MAG 90' LONG-2 DROPS STRAIGHT RAIL SYSTEM. INSTALL RAIL ±14'-0" A.F.F. TO BE INSTALLED AND SUPPLIED BY CERTIFIED PLYMOVENT INSTALLER. EXACT LENGTH TO BE VERIFY IN THE FIELD.
28. UTILITY/SERVICE SINK EXHAUST DUCT UP TO ROOF. PROVIDE ROOF CAP ON 6" HIGH ROOF CURB. VERIFY POINT OF TERMINATION THRU THE ROOF WITH ARCHITECT.
29. 10"X10" COMBUSTION AIR/MAKE UP AIR DUCT UP AND CONNECT TO GRAVITY VENT ON ROOF. PER 2022 CMC CHAPTER 7 SECTION 701.4.1. INSTALL REGISTERS WITHIN 12" OF THE TOP OF THE CEILING.
30. MITSUBISHI CENTRAL CONTROLLER PROPOSE LOCATION. COORDINATE EXACT LOCATION WITH ARCHITECT AND FS REPRESENTATIVE.
31. CONTINUOUS HIGH WALL LINEAR BAR SUPPLY AIR REGISTER WITH 2 ACTIVE SECTION. VERIFY EXACT SIZE AND LOCATION WITH ARCHITECT. PROVIDE ANEMOSTAT AL-2.
32. ELECTRICAL CONTRACTOR SHALL PROVIDE ALL LOW VOLTAGE CONDUIT ONLY WITH PULL STRING TO THERMOSTATS AND CENTRAL CONTROLLER AS DIRECTED BY MECHANICAL CONTRACTOR (TYPICAL).
33. DUCT SMOKE DETECTOR.

LEGEND

- - - - - - - - - - - 1-HR WALL WITH IRGB TYPE "X" ON BOTH SIDES

PER CHAPTER 7 SECTION 701.4.1 OF 2022 CALIFORNIA MECHANICAL CODE

COMBUSTION AIR CALCULATION

CONDITION:
APPLIANCE IN EQUIPMENT ROOM ALL AIR FROM OUTDOORS

SIZE OF OPENING:
PROVIDE ONE OPENINGS INTO ROOM ENCLOSURE HAVING 1 SQ.IN. PER 3,000 BTU/HR INPUT FROM OUTDOORS

GAS LOAD: (2) 50,000 BTU/H DRYERS = 100,000 BTU/H TOTAL

$$\frac{100{,}000 \text{ BTU/H}}{3{,}000 \text{ BTU/H}} = 33.34 \text{ SQ.IN. OPENING}$$

PROVIDED 10"X10" DUCT UP THROUGH ROOF.

$$10"\text{x}10" = \frac{100 \text{ SQ.IN.}}{2} = 50 \text{ SQ.IN., 50\% FREE AREA}$$

GENERAL NOTES

1. ALL DEBRIS SHALL BE DISPOSED OF IN AN APPROVED MANNER.
2. VERIFY THERMOSTAT/CONTROL LOCATION WITH ARCHITECT.
3. VERIFY EXACT LOCATION OF ALL SUPPLY, RETURN AND EXHAUST GRILLES, REGISTERS, GRILLES AND DIFFUSERS WITH INTERIOR DESIGNER AND ARCHITECT.
4. ALL HVAC DUCT SYSTEM SHALL CONSTRUCTED, INSTALLED AND INSULATED AS PROVIDED IN CHAPTER 6 OF CMC, 2022.
5. ALL HVAC EQUIPMENT SHALL BE APPROVED PRIOR TO INSTALLATION BY NATIONALLY RECOGNIZED STANDARDS AND EVIDENCED BY THE LISTING AND LABEL OF AN APPROVED AGENCY (CMC 302.1)
6. ALL APPLIANCES DESIGNED TO BE FIXED IN POSITION SHALL BE SECURELY FASTENED IN PLACE IN ACCORDANCE WITH MANUFACTURER INSTALLATION REQUIREMENTS AND THE BUILDING CODE. SEC 303.4 .
7. PROVIDE TURNING VANES AT ELBOWS.
8. DUCT SYSTEMS USED WITH BLOWER TYPE EQUIPMENT WHICH ARE PORTIONS OF A HEATING, COOLING, ABSORPTION, EVAPORATIVE COOLING OR OUTDOOR AIR VENTILATION SYSTEM SHALL BE SIZED IN ACCORDANCE WITH CHAPTER 17 OF THE MECHANICAL CODE.
9. DUCT SIZES GIVEN ON THE PLAN ARE NET CLEAR INSIDE DIMENSIONS. ADD THICKNESS OF INSULATIONS TO OBTAIN THE ACTUAL DUCT SIZES (+2" ALL AROUND).
10. MAINTAIN MINIMUM OF 10 FEET SEPARATION BETWEEN OSA INTAKE HOOD OF MUA AND EXHAUST OUTLET OR PLUMBING VENT.
11. ALL NEW DUCTWORK SHALL BE PRESSURE TESTED BEFORE PROVIDING DUCTWORK INSULATION. CHECK AND REPAIR FOR LEAKS.
12. DUCT AIR LEAKAGE SHALL BE TESTED AND VERIFIED BY HERS RATER.
13. PROVIDE YOUNG REGULATORS REMOTE OPERATOR DAMPER WHERE CEILING IS NON-ACCESSIBLE.
14. PROVIDE A MINIMUM OF 15 C.F.M. OF OUTSIDE AIR PER OCCUPANT IN ALL PORTIONS OF THE BUILDING DURING SUCH TIME AS THE BUILDING IS OCCUPIED.

PROJECT NORTH
TRUE NORTH

WILLIAM LOYD JONES
ARCHITECT
9415 culver boulevard
culver city, california
9 0 2 3 2
TEL 310 392 3995

KHALIFEH & ASSOCIATES
CONSULTING ENGINEERS
1625 W. OLYMPIC BLVD. #791, LOS ANGELES, CA 90
Tel: (310) 305-1555 Fax: (310) 305-1550
www.KhalifehAssociates.com
252671

REGISTERED PROFESSIONAL ENGINEER
JACK Y. KHALIFEH
No. M025454
Exp. SEPT. 2026
STATE OF CALIFORNIA

MECHANICAL FLOOR PLAN

FIRE STATION 46
COUNTY OF LOS ANGELES FIRE DEPARTMENT
26720 BOMBERO LANE
VALENCIA, CALIFORNIA

FIVEPOINT Project

Issue	
LACoFD APPROVED	11.MAR.25
100% DD SET	17.APR.2
FIRE DEPARTMENT SUBMITTAL SET	20.MAY.25
PLAN CHECK SUBMITTAL SET	13.AUG.2
PLAN CHECK RESUBMITTAL SET	07.NOV.2
PLAN CHECK RESUBMITTAL SET	17.DEC.25
1 ADDED COMBINE SFD	05.MAR.2

THE ABOVE DRAWINGS AND SPECIFICATIONS AND IDEAS, DESIGNS AND ARRANGEMENTS REPRESENTED THEREBY ARE AND SHALL REMAIN THE PROPERTY OF THE ARCHITECT AND THE ARCHITECT HAS THE RIGHT TO BE PROTECTED. DISCLOSED TO OTHERS OR USED IN CONNECTION WITH ANY WORK OR PROJECT OTHER THAN THE SPECIFIC PROJECT FOR WHICH THEY HAVE BEEN PREPARED AND DEVELOPED MAY BE DISCLOSED OR USED ONLY WITH WRITTEN CONSENT OF THE ARCHITECT. CONTACT WITH THESE DRAWINGS OR SPECIFICATIONS SHALL CONSTITUTE CONCLUSIVE EVIDENCE OF ACCEPTANCE OF THESE RESTRICTIONS.

WRITTEN DIMENSIONS ON THESE DRAWINGS SHALL HAVE PRECEDENCE OVER SCALED DIMENSIONS. CONTRACTORS SHALL VERIFY AND BE RESPONSIBLE FOR ALL DIMENSIONS AND CONDITIONS ON THE JOB. ANY DISCREPANCIES MUST BE REPORTED TO THE ARCHITECT BEFORE PROCEEDING WITH FABRICATION. SHOP DETAILS SHOWN BY THESE DRAWINGS, SHOP DETAILS MUST BE SUBMITTED TO THIS OFFICE FOR APPROVAL BEFORE PROCEEDING WITH FABRICATION.

Copyright 2005

Date	17.DEC.25
Drawn	BD
Checked	JK
Scale	1/8" = 1'-0"
Job. No.	

M1.1

ADDENDUM# 3 - BID SET - APRIL 30, 2026

Plot date : 2026-03-19

BUILDING AND SAFETY DIVISION
Department of Public Works
FINAL ENERGY APPROVED
UNDER CCR TITLE 24, PART 1, ARTICLE 1 & PART 6
JMoon
PUBLIC WORKS
04/20/2026 10:58:03 AM
This set of plans and specifications must be kept at the job site at all times, and it is unlawful to make any changes, modifications or alterations to these plans or specifications without the prior written permission of the Building Official. The stamping of this set of plans and specifications SHALL NOT, under any circumstances, be deemed to permit or to be an approval of any work or activity that violates any provisions of any County Ordinance or State Law

BUILDING AND SAFETY DIVISION
Department of Public Works
APPROVED
UNDER LOS ANGELES COUNTY CODE TITLE 29
JMoon
PUBLIC WORKS
04/20/2026 10:56:01 AM
This set of plans and specifications must be kept at the job site at all times, and it is unlawful to make any changes, modifications or alterations to these plans or specifications without the prior written permission of the Building Official. The stamping of this set of plans and specifications SHALL NOT, under any circumstances, be deemed to permit or to be an approval of any work or activity that violates any provisions of any County Ordinance or State Law

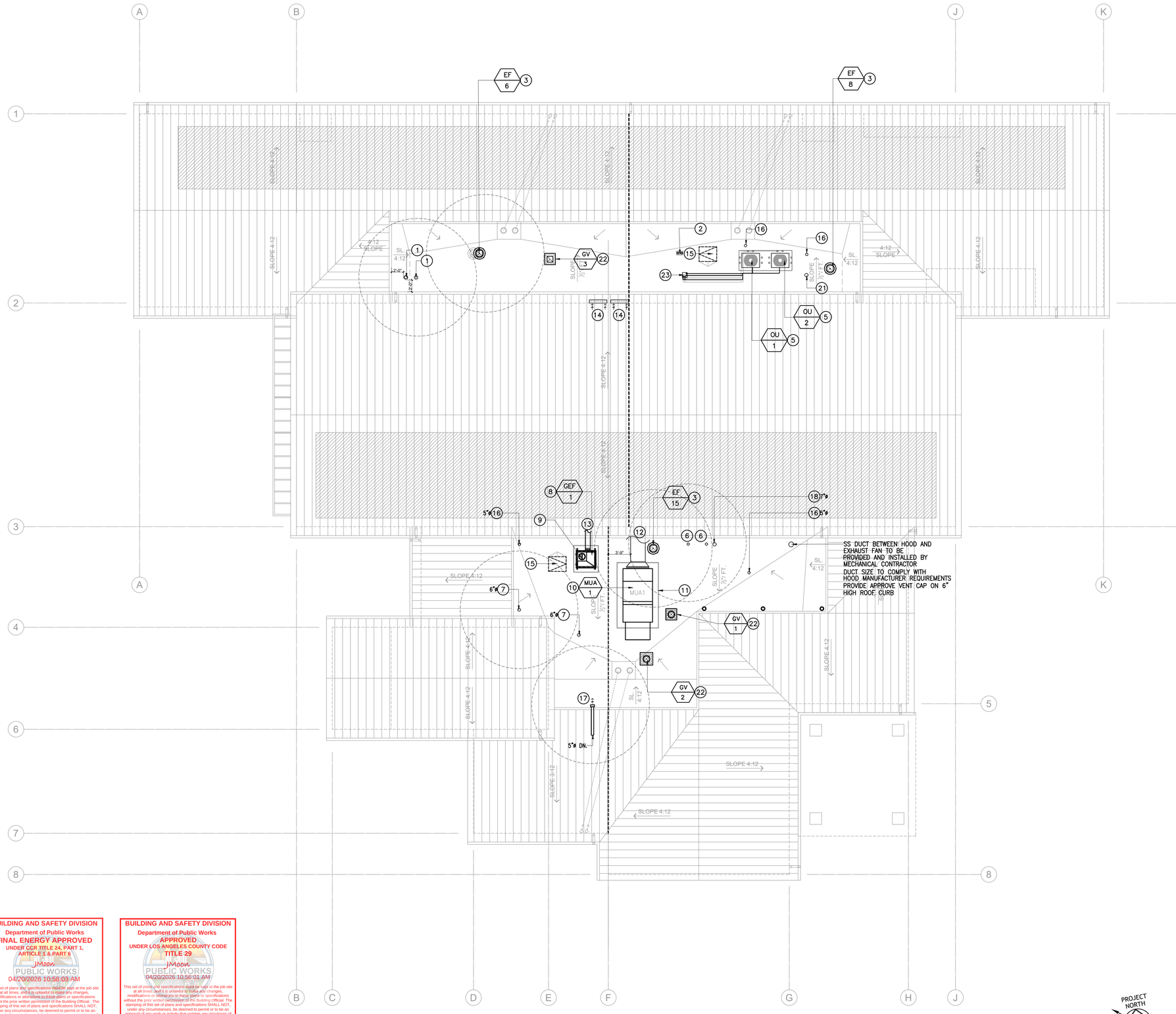

BUILDING AND SAFETY DIVISION
Department of Public Works
FINAL ENERGY APPROVED
UNDER CGR TITLE 24, PART 1, ARTICLE 1.6 PART 8
JMoore
PUBLIC WORKS
04/20/2026 10:58:03 AM
This set of plans and specifications must be kept at the job site at all times, and it is unlawful to make any changes, modifications or alterations to these plans or specifications without the prior written permission of the Building Official. The stamping of this set of plans and specifications SHALL NOT, under any circumstances, be deemed to permit or to be an approval of any work or activity that violates any provisions of any County Ordinance or State Law

BUILDING AND SAFETY DIVISION
Department of Public Works
APPROVED
UNDER LOS ANGELES COUNTY CODE TITLE 29
JMoore
PUBLIC WORKS
04/20/2026 10:56:01 AM
This set of plans and specifications must be kept at the job site at all times, and it is unlawful to make any changes, modifications or alterations to these plans or specifications without the prior written permission of the Building Official. The stamping of this set of plans and specifications SHALL NOT, under any circumstances, be deemed to permit or to be an approval of any work or activity that violates any provisions of any County Ordinance or State Law

KEYNOTES

1. 7"Ø OUTSIDE SUPPLY AIR DUCT UP. PROVIDE ROOF CAP ON 6" HIGH ROOF CURB. VERIFY POINT OF TERMINATION THRU THE MECHANICAL WELL WITH THE ARCHITECT.
2. 4"Ø CPVC FLUE AND COMBUSTION AIR UP THRU ROOF. TERMINATE TO APPROVED VENT CAP. COMPLY WITH MANUFACTURER LISTING, PROVIDE TERMINATION KIT. VERIFY EXACT LOCATION OF PENETRATION WITH ARCHITECT.
3. INSTALL FAN ON 12" HIGH FACTORY SUPPLIED ROOF CURB WITH CURB CAP. CURB WITH CURB CAP.
4.
5. PROVIDE 6" HIGH EQUIPMENT PLATFORM. PROVIDE BASE RAIL WITH VIBRATION ISOLATORS (2" DEFLECTION).
6. 4"Ø DRYER EXHAUST DUCT CONNECTION TO DOMESTIC DRYER THRU ROOF. PROVIDE DRYER VENT CAP WITH INTEGRAL BACKDRAFT DAMPER. VERIFY POINT OF TERMINATION THRU THE ROOF WITH ARCHITECT.
7. OUTSIDE SUPPLY AIR DUCT. PROVIDE ROOF CAP ON 6" HIGH ROOF CURB.
8. VEHICLE EXHAUST FAN. INSTALL ON 6" HIGH EQUIPMENT PLATFORM. PROVIDE WITH VIBRATION ISOLATORS WITH SEISMIC RESTRAINTS.
9. 12"Ø EXHAUST DUCT UP THRU UPPER ROOF. EXHAUST DUCT SHALL BE 10' FROM PROPERTY LINE. 10' FROM ANY OPENING INTO THE BUILDING & 3' ABOVE ROOF. PROVIDE GOOSENECK.
10. PROVIDE FLEXIBLE CONNECTOR TO FAN AIR OUTLET OF MAKE UP AIR UNIT.
11. 8" HIGH EQUIPMENT PLATFORM WITH SHEET METAL COVER. REFER TO ARCHITECTURAL PLAN. EXTEND 12" BEYOND EQUIPMENT FOOTPRINT. REFER TO ARCHITECTURAL PLAN. PROVIDE BASE RAIL WITH 2" DEFLECTION VIBRATION ISOLATORS AND SEISMIC RESTRAINT BY MW SAUSSE.
12. MAKE-UP AIR DUCT TO APPARATUS ROOM CEILING SPACE. FOR CONTINUATION SEE SHEET M1.1.
13. EXHAUST AIR DUCT TO APPARATUS ROOM CEILING SPACE. FOR CONTINUATION SEE SHEET M1.1.
14. PROVIDE 36"X48" HIGH WALL MOUNTED EXHAUST AIR LOUVER WITH INTEGRAL BACKDRAFT DAMPER. THE LOUVER SHALL HAVE A MIN. FREE AREA OF 4.3 SQ. FT. (2150 CFM) EACH. SEE ARCHITECTURAL PLAN FOR EXACT SIZE AND LOCATION OF LOUVERS. MOUNT A WHITE GRILLE INSIDE WITH A FLANGE. FOR CONTINUATION SEE SHEET M1.1.
15. PERMANENT ROOF ACCESS. SEE ARCHITECT PLAN FOR DETAIL
16. 5"Ø BATHROOM EXHAUST DUCT UP TO ROOF. PROVIDE ROOF CAP ON 6" HIGH ROOF CURB. VERIFY POINT OF TERMINATION THRU THE ROOF WITH ARCHITECT.
17. 5"Ø COPY ROOM EXHAUST DUCT UP TO ROOF AND TERMINATE TO MECHANICAL WELL WALL. PROVIDE EXHAUST VENT CAP. PROVIDE SEIHO VENT CAP MODEL CFX-5N. VERIFY POINT OF TERMINATION THRU THE ROOF WITH ARCHITECT.
18. 6"Ø UTILITY/SERVICE SINK EXHAUST DUCT UP TO ROOF. PROVIDE ROOF JACK ON 6" HIGH ROOF CURB. VERIFY POINT OF TERMINATION THRU THE ROOF WITH ARCHITECT.
19. NOTE NOT USED.
20. NOTE NOT USED.
21. 7"Ø JAN./STORAGE EXHAUST DUCT UP TO ROOF. PROVIDE ROOF JACK ON 6" HIGH ROOF CURB. VERIFY POINT OF TERMINATION THRU THE ROOF WITH ARCHITECT.
22. GRAVITY VENT ON 12" HIGH FACTORY ROOF CURB.
23. 10"X10" OPENING FOR REFRIGERANT PIPE THRU ROOF. SEE DETAIL #3 ON SHEET M4.3.

GENERAL NOTES

1. ALL DEBRIS SHALL BE DISPOSED OF IN AN APPROVED MANNER.
2. MAINTAIN MINIMUM OF 10FT. SEPARATION BETWEEN OSA INTAKE HOOD OF PAC, EXHAUST OUTLET OR PLUMBING VENTS.
3. COORDINATE IN THE FIELD FOR EXACT LOCATION OF DUCT PENETRATION THRU ROOF W/ ARCHITECT AND STRUCTURAL.
4. ALL HVAC DUCT SYSTEM SHALL CONSTRUCTED, INSTALLED AND INSULATED AS PROVIDED IN CHAPTER 6 OF CMC, 2022.
5. ALL HVAC EQUIPMENT SHALL BE APPROVED PRIOR TO INSTALLATION BY NATIONALLY RECOGNIZED STANDARDS AND EVIDENCED BY THE LISTING AND LABEL OF AN APPROVED AGENCY (CMC 302.1)
6. ALL APPLIANCES DESIGNED TO BE FIXED IN POSITION SHALL BE SECURELY FASTENED IN PLACE IN ACCORDANCE WITH MANUFACTURER INSTALLATION REQUIREMENTS AND THE BUILDING CODE. SEC 303.4 .
7. ALL NEW DUCTWORK SHALL BE PRESSURE TESTED BEFORE PROVIDING DUCTWORK INSULATION. CHECK AND REPAIR FOR LEAKS.
8. DUCT AIR LEAKAGE SHALL BE TESTED AND VERIFIED BY HERS RATER.
9. AIR CONDITIONING REFRIGERANT CIRCUIT ACCESS PORTS LOCATED OUTDOORS SHALL BE PROTECTED FROM UNAUTHORIZED ACCESS. SEC 1105.11.
10. ROOF MOUNTED EQUIPMENT SHALL BE LABELED AS TO THE SPACE IT SERVES. SEC 303.6.
11. NO OBSTRUCTIONS, INCLUDING BUT NOT LIMITED TO, VENTS, CHIMNEYS, ARCHITECTURAL FEATURES AND ROOF MOUNTED EQUIPMENT, SHALL BE LOCATED IN THE SOLAR ZONE. 2022 CEC 110.10(B)3.
12. EXHAUST AIR OPENINGS SHALL BE COVERED WITH A SCREEN HAVING NOT LESS THAN 1/4-INCH OPENINGS AND NOT MORE THAN ½-INCH OPENINGS. SEC 502.1.
13. OUTDOOR AIR INTAKE OPENINGS SHALL BE COVERED WITH A SCREEN HAVING NOT LESS THAN 1/4-INCH OPENINGS AND NOT MORE THAN ½-INCH OPENINGS. SEC 402.4.
14. CONDENSATE PUMP DISCHARGE SHALL RISE VERTICALLY TO A POINT WHERE IT IS POSSIBLE TO CONNECT TO A GRAVITY CONDENSATE DRAIN LINE. EACH UNIT SHALL BE PROVIDED WITH A SEPARATE SUMP AND INTERLOCKED WITH THE RESPECTIVE EQUIPMENT SERVED. 310.1.1 .
15. HEATING, VENTILATING, AND AIR CONDITIONING SYSTEMS (INCLUDING HYDRONIC SYSTEMS) SHALL BE BALANCED IN ACCORDANCE WITH AN APPROVED METHOD PER SECTION 314.1 OF THE CALIFORNIA MECHANICAL CODE.

WILLIAM LOYD JONES
ARCHITECT
9415 culver boulevard
culver city, california
9 0 2 3 2
TEL 310 392 3995

ADDENDUM# 3 - BID SET - APRIL 30, 2026

KHALIFEH & ASSOCIATES
CONSULTING ENGINEERS
1625 W, OLYMPIC BLVD, #791, LOS ANGELES, CA 90
Tel: (310) 305-1555 Fax: (310) 305-1550
www.KhalifehAssociates.com
252671
REGISTERED PROFESSIONAL ENGINEER
JACK Y. KHALIFEH
No. M025454
Exp. SEPT. 2026
STATE OF CALIFORNIA

ROOF MECHANICAL PLAN

FIRE STATION 46

COUNTY OF LOS ANGELES FIRE DEPARTMENT
26720 BOMBERO LANE
VALENCIA, CALIFORNIA

FIVEPOINT Architecture

Issue	
LACoFD APPROVED	11.MAR.25
100% DD SET	17.APR.25
FIRE DEPARTMENT SUBMITTAL SET	20.MAY.25
PLAN CHECK SUBMITTAL SET	13.AUG.25
PLAN CHECK RESUBMITTAL SET	07.NOV.25
PLAN CHECK RESUBMITTAL SET	17.DEC.25

THE ABOVE DRAWINGS AND SPECIFICATIONS AND IDEAS, DESIGNS AND ARRANGEMENTS REPRESENTED THEREBY ARE AND SHALL REMAIN THE PROPERTY OF THE ARCHITECT, AND NO PART THEREOF SHALL BE COPIED, DISCLOSED TO OTHERS OR USED IN CONNECTION WITH ANY WORK OR PROJECT OTHER THAN THE SPECIFIC PROJECT FOR WHICH THEY HAVE BEEN PREPARED AND DEVELOPED WITHOUT THE WRITTEN CONSENT OF THE ARCHITECT. VISUAL CONTACT WITH THESE DRAWINGS AND SPECIFICATIONS SHALL CONSTITUTE CONCLUSIVE EVIDENCE OF ACCEPTANCE OF THESE RESTRICTIONS.

WRITTEN DIMENSIONS ON THESE DRAWINGS SHALL HAVE PRECEDENCE OVER SCALED DIMENSIONS. CONTRACTORS SHALL VERIFY AND BE RESPONSIBLE FOR ALL DIMENSIONS AND CONDITIONS ON THE JOB AND THIS OFFICE MUST BE NOTIFIED OF ANY VARIATIONS FROM THE DIMENSIONS AND CONDITIONS SHOWN BY THESE DRAWINGS. SHOP DETAILS MUST BE SUBMITTED TO THIS OFFICE FOR APPROVAL BEFORE PROCEEDING WITH FABRICATION.

Copyright 2005

Date	17.DEC.25
Drawn	BD
Checked	JK
Scale	1/8" = 1'-0"
Job. No.	

M2.1

Plot date : 2026-03-18

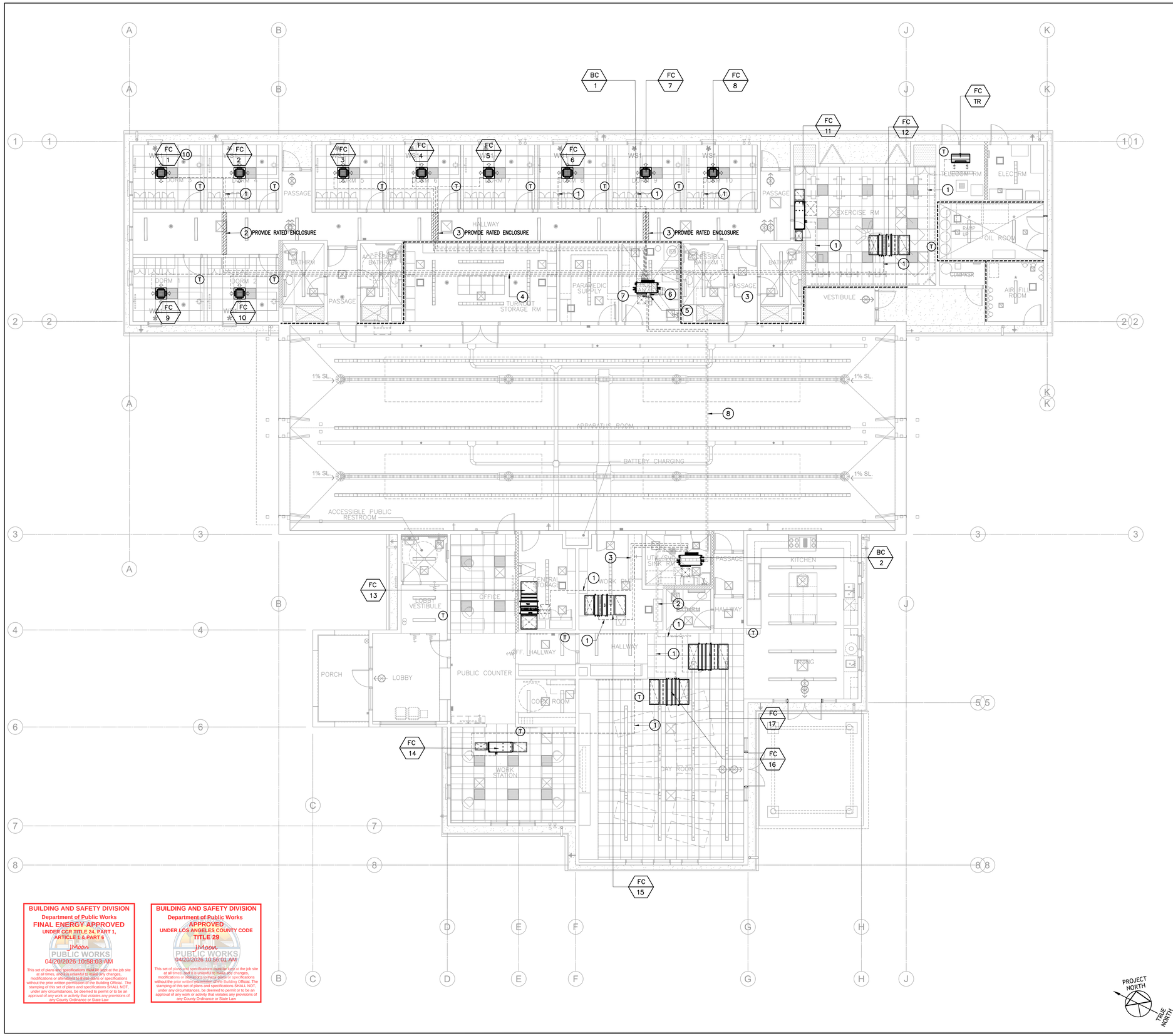

BUILDING AND SAFETY DIVISION
Department of Public Works
FINAL ENERGY APPROVED
UNDER CCR TITLE 24, PART 1, ARTICLE 1 & PART 6
JMoore
PUBLIC WORKS
04/20/2026 10:58:03 AM
This set of plans and specifications must be kept at the job site at all times, and it is unlawful to make any changes, modifications or alterations to these plans or specifications without the prior written permission of the Building Official. The stamping of this set of plans and specifications SHALL NOT, under any circumstances, be deemed to permit or to be an approval of any work or activity that violates any provisions of any County Ordinance or State Law.

BUILDING AND SAFETY DIVISION
Department of Public Works
APPROVED
UNDER LOS ANGELES COUNTY CODE TITLE 29
JMoore
PUBLIC WORKS
04/20/2026 10:56:01 AM
This set of plans and specifications must be kept at the job site at all times, and it is unlawful to make any changes, modifications or alterations to these plans or specifications without the prior written permission of the Building Official. The stamping of this set of plans and specifications SHALL NOT, under any circumstances, be deemed to permit or to be an approval of any work or activity that violates any provisions of any County Ordinance or State Law.

KEYNOTES

1. 1 PAIR OF INSULATED REFRIGERANT PIPES RUN AS HIGH AS POSSIBLE. COORDINATE EXACT ROUTING ON THE FIELD WITH ARCHITECT & STRUCTURAL ENGINEER.
2. 2 PAIRS OF INSULATED REFRIGERANT PIPES RUN AS HIGH AS POSSIBLE. COORDINATE EXACT ROUTING ON THE FIELD WITH ARCHITECT & STRUCTURAL ENGINEER.
3. 3 PAIRS OF INSULATED REFRIGERANT PIPES RUN AS HIGH AS POSSIBLE. COORDINATE EXACT ROUTING ON THE FIELD WITH ARCHITECT & STRUCTURAL ENGINEER.
4. 4 PAIRS OF INSULATED REFRIGERANT PIPES RUN AS HIGH AS POSSIBLE. COORDINATE EXACT ROUTING ON THE FIELD WITH ARCHITECT & STRUCTURAL ENGINEER.
5. 10"X10" OPENING FOR REFRIGERANT PIPE THRU ROOF. SEE DETAIL #3 ON SHEET M4.3.
6. 1 PAIR OF INSULATED REFRIGERANT PIPE UP TO OU-1 ON THE R00F. COORDINATE EXACT ROUTING ON THE FIELD WITH ARCHITECT & STRUCTURAL ENGINEER.
7. 1 PAIR OF INSULATED REFRIGERANT PIPE UP TO OU-2 ON THE R00F. COORDINATE EXACT ROUTING ON THE FIELD WITH ARCHITECT & STRUCTURAL ENGINEER.
8. 1 PAIR OF INSULATED REFRIGERANT PIPE FROM OU-2 TO BC-2. RUN AS HIGH AS POSSIBLE IN BETWEEN ROOF STRUCTURE. COORDINATE EXACT ROUTING ON THE FIELD WITH ARCHITECT & STRUCTURAL ENGINEER.

GENERAL NOTES

1. ALL DEBRIS SHALL BE DISPOSED OF IN AN APPROVED MANNER.
2. ALL REFRIGERATION SYSTEMS SHALL BE INSTALLED IN ACCORDANCE WITH THE
3. MANUFACTURER INSTALLATION INSTRUCTIONS
4. ALL REFRIGERANT PIPING, FITTINGS, AND VALVES SHALL BE LISTED OR DEMONSTRATE COMPLIANCE WITH THE REQUIREMENT IN ASHRAE 15: SEC. 9.10
5. REFRIGERANT PIPING SHALL NOT BE INSTALLED IN THE FOLLOWING LOCATIONS:
   a. EXPOSED WITHIN FIRE RESISTANCE RATED EXIT ACCESS CORRIDOR
   b. EXPOSED WITHIN AN INTERIOR EXIT STAIRWAY
   c. EXPOSED WITHIN AN INTERIOR EXIT RAMP ENCLOSURE
   d. EXIT PASSAGEWAY
   e. ELEVATOR, DUMBWAITER, OR OTHER SHAFT CONTAINING A MOVING OBJECT
   f. INSIDE AN AIR DUCT OR RETURN AIR PLENUM
6. REFRIGERANT PIPING SHALL NOT PENETRATE FLOORS, CEILINGS OR ROOFS.
   EXCEPTION:
   PENETRATIONS WHERE THE REFRIGERANT CONCENTRATION DOES NOT EXCEED THAT LISTED IN TABLE 1102.2 FOR THE SMALLEST OCCUPIED ROOMS (SMALLEST OCCUPIED ROOM IS THAT NOT MEETING THE MINIMUM VOLUME REQUIREMENTS FOR THE AMOUNT OF REFRIGERANT CONTAINED IN THE EQUIPMENT, AS SHOWN IN TABLE 1102.2 FOR THE TYPE OF REFRIGERANT USED) THROUGH WHICH REFRIGERANT PIPING PASSES SEC 1109.3.

WILLIAM LOYD JONES
ARCHITECT
9415 culver boulevard
culver city, california
9 0 2 3 2
TEL 3IO 392 3995

ADDENDUM# 3 - BID SET - APRIL 30, 2026

KHALIFEH & ASSOCIATES
CONSULTING ENGINEERS
1625 W, OLYMPIC BLVD, #791, LOS ANGELES, CA 90
Tel: (310) 305-1555 Fax: (310) 305-1550
www.KhalifehAssociates.com
252671
REGISTERED PROFESSIONAL ENGINEER
JACK Y. KHALIFEH
No. M025454
Exp. SEPT. 2026
STATE OF CALIFORNIA

MECHANICAL FLOOR REFRIGERANT PIPING PLAN

FIRE STATION 46

COUNTY OF LOS ANGELES FIRE DEPARTMENT
26720 BOMBERO LANE
VALENCIA, CALIFORNIA

FIVEPOINT

Issue	
LACoFD APPROVED	11.MAR.25
100% DD SET	17.APR.2
FIRE DEPARTMENT SUBMITTAL SET	20.MAY.25
PLAN CHECK SUBMITTAL SET	13.AUG.2
PLAN CHECK RESUBMITTAL SET	07.NOV.25
PLAN CHECK RESUBMITTAL SET	17.DEC.25

THE ABOVE DRAWINGS AND SPECIFICATIONS AND IDEAS, DESIGNS AND ARRANGEMENTS REPRESENTED THEREBY ARE AND SHALL REMAIN THE PROPERTY OF THE ARCHITECT, AND NO PART THEREOF SHALL BE COPIED, DISCLOSED TO OTHERS OR USED IN CONNECTION WITH ANY WORK OR PROJECT OTHER THAN THE SPECIFIC PROJECT FOR WHICH THEY HAVE BEEN PREPARED AND DEVELOPED WITHOUT THE WRITTEN CONSENT OF THE ARCHITECT. ANY USE OR CONTACT WITH THESE DRAWINGS OR SPECIFICATIONS SHALL CONSTITUTE CONCLUSIVE EVIDENCE OF ACCEPTANCE OF THESE RESTRICTIONS.

WRITTEN DIMENSIONS ON THESE DRAWINGS SHALL HAVE PRECEDENCE OVER SCALED DIMENSIONS. CONTRACTORS SHALL VERIFY AND BE RESPONSIBLE FOR ALL DIMENSIONS AND CONDITIONS ON THE JOB. THE ARCHITECT SHALL BE NOTIFIED OF ANY VARIATIONS FROM THE DIMENSIONS AND CONDITIONS SHOWN BY THESE DRAWINGS. SHOP DETAILS MUST BE SUBMITTED TO THIS OFFICE FOR APPROVAL BEFORE PROCEEDING WITH FABRICATION.

Copyright 2005

Date	17.DEC.25
Drawn	BD
Checked	JK
Scale	1/8" = 1'-0"
Job. No.	

M1.1R

Plot date : 2026-03-18

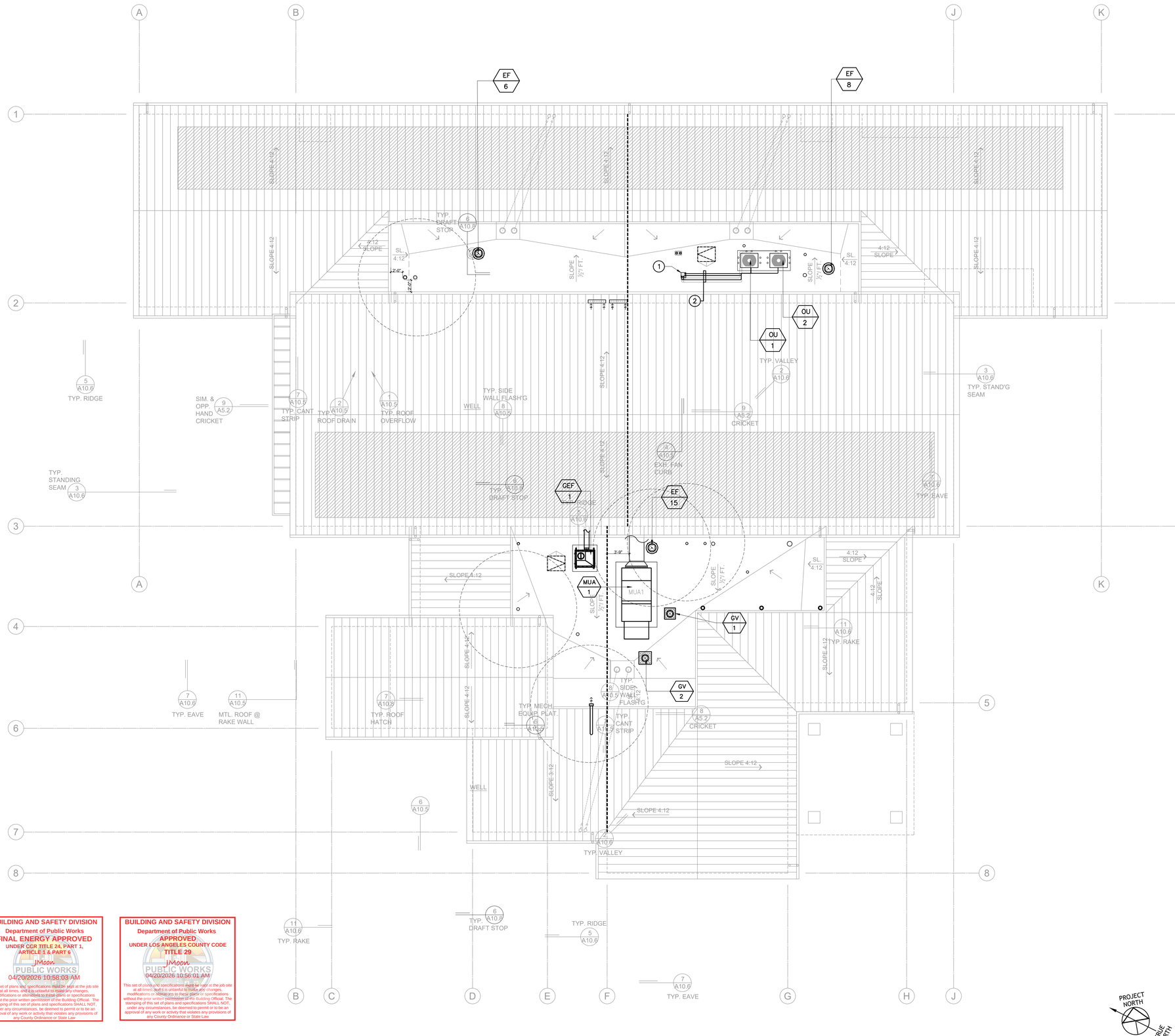

KEYNOTES

1. 10"X10" OPENING FOR REFRIGERANT PIPE THRU ROOF. SEE DETAIL #3 ON SHEET M4.3.
2. 2 PAIRS OF INSULATED REFRIGERANT PIPES FROM OUTDOOR UNIT TO INDOOR BRANCH CONTROLLER (BC-1 AND BC-2). COORDINATE EXACT ROUTING ON THE FIELD WITH ARCHITECT & STRUCTURAL ENGINEER. SEE SHEET M1.1R FOR CONTINUATION.

GENERAL NOTES

1. ALL DEBRIS SHALL BE DISPOSED OF IN AN APPROVED MANNER.
2. MAINTAIN MINIMUM OF 10FT. SEPARATION BETWEEN OSA INTAKE HOOD OF PAC, EXHAUST OUTLET OR PLUMBING VENTS.
3. COORDINATE IN THE FIELD FOR EXACT LOCATION OF DUCT PENETRATION THRU ROOF W/ ARCHITECT AND STRUCTURAL.
4. ALL HVAC DUCT SYSTEM SHALL CONSTRUCTED, INSTALLED AND INSULATED AS PROVIDED IN CHAPTER 6 OF CMC, 2022.
5. ALL HVAC EQUIPMENT SHALL BE APPROVED PRIOR TO INSTALLATION BY NATIONALLY RECOGNIZED STANDARDS AND EVIDENCED BY THE LISTING AND LABEL OF AN APPROVED AGENCY (CMC 302.1)
6. APPLIANCES DESIGNED TO BE FIXED IN POSITION SHALL BE SECURELY FASTENED IN PLACE, CMC 304.4.
7. ALL NEW DUCTWORK SHALL BE PRESSURE TESTED BEFORE PROVIDING DUCTWORK INSULATION. CHECK AND REPAIR FOR LEAKS.
8. DUCT AIR LEAKAGE SHALL BE TESTED AND VERIFIED BY HERS RATER.

WILLIAM LOYD JONES
ARCHITECT
9415 culver boulevard
culver city, california
9 0 2 3 2
TEL 310 392 3995

KHALIFEH & ASSOCIATES
CONSULTING ENGINEERS
1625 W, OLYMPIC BLVD, #791, LOS ANGELES, CA 90
Tel: (310) 305-1555 Fax: (310) 305-1550
www.KhalifehAssociates.com
252671

REGISTERED PROFESSIONAL ENGINEER
JACK Y. KHALIFEH
No. M025454
Exp. SEPT. 2026
STATE OF CALIFORNIA

ROOF REFRIGERANT PIPING PLAN

FIRE STATION 46

COUNTY OF LOS ANGELES FIRE DEPARTMENT
26720 BOMBERO LANE
VALENCIA, CALIFORNIA

FIVEPOINT Project

Issue	
LACoFD APPROVED	11.MAR.25
100% DD SET	17.APR.2
FIRE DEPARTMENT SUBMITTAL SET	20.MAY.25
PLAN CHECK SUBMITTAL SET	13.AUG.2
PLAN CHECK RESUBMITTAL SET	07.NOV.25
PLAN CHECK RESUBMITTAL SET	17.DEC.25

THE ABOVE DRAWINGS AND SPECIFICATIONS AND IDEAS, DESIGNS AND ARRANGEMENTS REPRESENTED THEREBY ARE AND SHALL REMAIN THE PROPERTY OF THE ARCHITECT, AND NO PART THEREOF SHALL BE COPIED, DISCLOSED TO OTHERS OR USED IN CONNECTION WITH ANY WORK OR PROJECT OTHER THAN THE SPECIFIC PROJECT FOR WHICH THEY HAVE BEEN PREPARED AND DEVELOPED WITHOUT THE WRITTEN CONSENT OF THE ARCHITECT. ANY CONTACT WITH THESE DRAWINGS OR SPECIFICATIONS SHALL CONSTITUTE CONCLUSIVE EVIDENCE OF ACCEPTANCE OF THESE RESTRICTIONS.

WRITTEN DIMENSIONS ON THESE DRAWINGS SHALL HAVE PRECEDENCE OVER SCALED DIMENSIONS. CONTRACTORS SHALL VERIFY AND BE RESPONSIBLE FOR ALL DIMENSIONS AND CONDITIONS. THE ARCHITECT SHALL BE NOTIFIED OF ANY VARIATIONS FROM THE DIMENSIONS AND CONDITIONS SHOWN BY THESE DRAWINGS. SHOP DETAILS MUST BE SUBMITTED TO THIS OFFICE FOR APPROVAL BEFORE PROCEEDING WITH FABRICATION.

Copyright 2005

Date	17.DEC.25
Drawn	BD
Checked	JK
Scale	1/8" = 1'-0"
Job. No.	

M2.1R

Plot date : 2026-03-18

ADDENDUM# 3 - BID SET - APRIL 30, 2026

BUILDING AND SAFETY DIVISION
Department of Public Works
FINAL ENERGY APPROVED
UNDER CCR TITLE 24, PART 1, ARTICLE 1.6 PART 6
JMOOR
PUBLIC WORKS
04/20/2026 10:58:03 AM
This set of plans and specifications must be kept at the job site at all times, and it is unlawful to make any changes, modifications or alterations to these plans or specifications without the prior written permission of the Building Official. The stamping of this set of plans and specifications SHALL NOT, under any circumstances, be deemed to permit or to be an approval of any work or activity that violates any provisions of any County Ordinance or State Law

BUILDING AND SAFETY DIVISION
Department of Public Works
APPROVED
UNDER LOS ANGELES COUNTY CODE TITLE 29
JMOOR
PUBLIC WORKS
04/20/2026 10:56:01 AM
This set of plans and specifications must be kept at the job site at all times, and it is unlawful to make any changes, modifications or alterations to these plans or specifications without the prior written permission of the Building Official. The stamping of this set of plans and specifications SHALL NOT, under any circumstances, be deemed to permit or to be an approval of any work or activity that violates any provisions of any County Ordinance or State Law

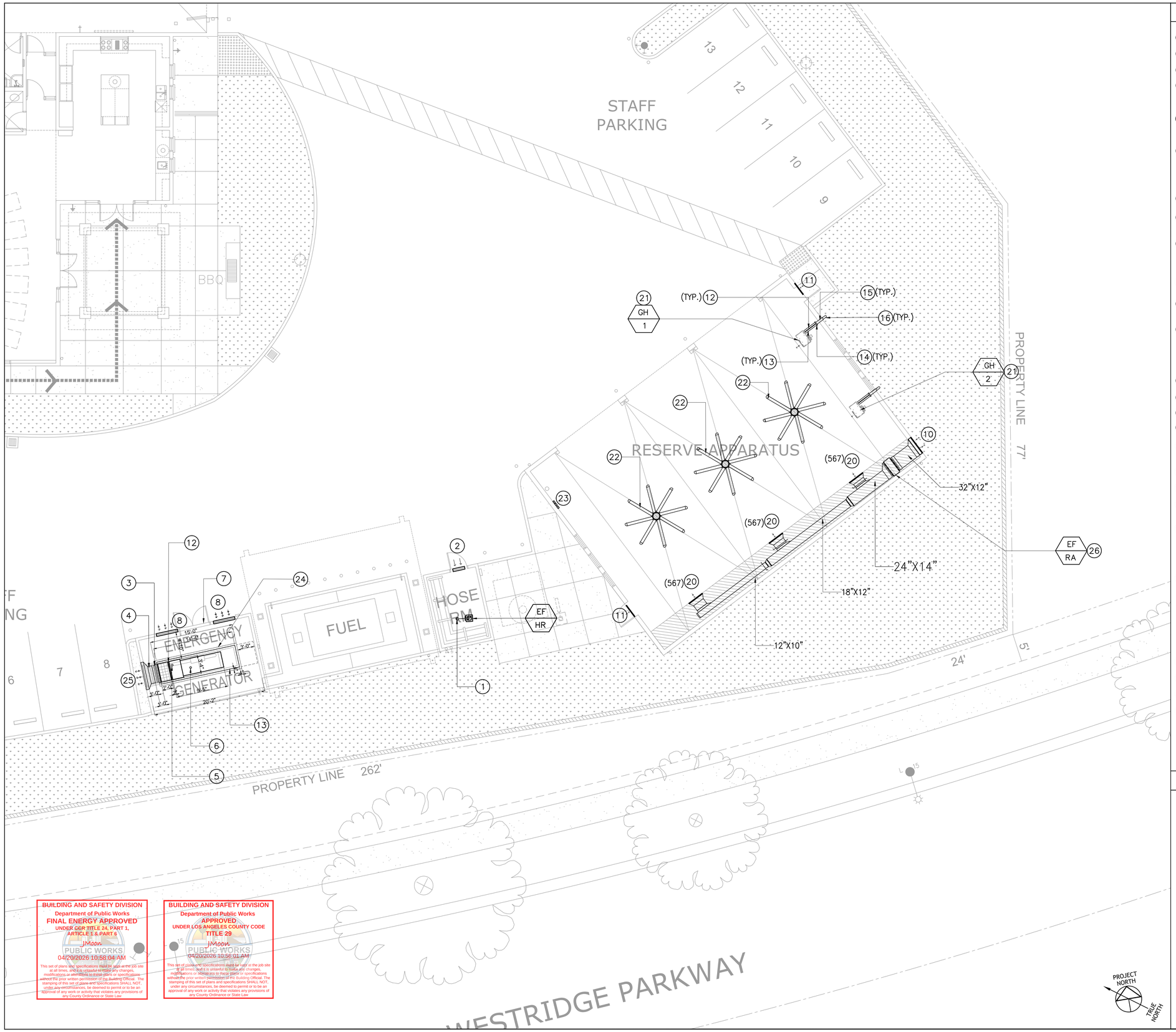

BUILDING AND SAFETY DIVISION
Department of Public Works
FINAL ENERGY APPROVED
UNDER CBC TITLE 24, PART 1, ARTICLE 1 & PART 6
JMoon
PUBLIC WORKS
04/20/2026 10:58:04 AM
This set of plans and specifications must be kept at the job site at all times, and it is unlawful to make any changes, modifications or alterations to these plans or specifications without the prior written permission of the Building Official. The stamping of this set of plans and specifications SHALL NOT, under any circumstances, be deemed to permit or to be an approval of any work or activity that violates any provisions of any County Ordinance or State Law

BUILDING AND SAFETY DIVISION
Department of Public Works
APPROVED
UNDER LOS ANGELES COUNTY CODE TITLE 29
JMoon
PUBLIC WORKS
04/20/2026 10:56:01 AM
This set of plans and specifications must be kept at the job site at all times, and it is unlawful to make any changes, modifications or alterations to these plans or specifications without the prior written permission of the Building Official. The stamping of this set of plans and specifications SHALL NOT, under any circumstances, be deemed to permit or to be an approval of any work or activity that violates any provisions of any County Ordinance or State Law

KEYNOTES

1. 8"Ø EXHAUST DUCT UP THRU ROOF. PROVIDE ROOF CAP ON 6" HIGH ROOF CURB. VERIFY EXACT LOCATION WITH ARCHITECT.
2. PROVIDE DOOR LOUVER. PROVIDE MIN. 0.4 SQ. FT. OF FREE AREA (200 CFM). VERIFY EXACT SIZE AND LOCATION WITH THE ARCHITECT.
3. PROVIDE FLEXIBLE CONNECTION (FLEXIBLE BELLOWS).
4. EXTEND EXHAUST DUCT. DUCT SIZE PER LOAD BANK OUTLET DUCT OPENING. PROVIDE REQUIRED TRANSITION TO CONNECT TO WALL MOUNTED LOUVER WITH INTEGRAL BACKDRAFT DAMPER AND 1/16" MESH SCREEN. VERIFY EXACT SIZE AND LOCATION WITH THE ARCHITECT.
5. 4"Ø POSITIVE PRESSURE VENT PIPE FROM THE GENERATOR EXHAUST OUTLET AND CONNECT TO DPF (SDPF-2-H-CS-BITO-6/6-LP. PROVIDE FLEXIBLE TUBING. COMPLY WITH MANUFACTURER'S INSTALLATION LISTING REQUIREMENTS.
6. EXTEND WELDED SCHEDULE 40 BLACK STEEL ENGINE EXHAUST VENT PIPE FROM DPF TO 2 FT. ABOVE ROOF LEVEL. VERIFY EXACT LOCATION WITH ARCHITECT. PROVIDE THIMBLE AT PENETRATION THRU THE ROOF. RAIN CAP TO BE PROVIDED BY GENERATOR MANUFACTURER. (REFER TO ELECTRICAL PLANS) PROVIDE CONDENSATE DRAIN TRAP AND PLUG WHERE PIPING TURNS TO RISE VERTICALLY.
7. PROVIDE FULLY LOUVERED DOOR. PROVIDE NET FREE AREA OF 10 SQ. FT. VERIFY EXACT SIZE WITH ARCHITECT.
8. WALL MOUNTED LOUVER. PROVIDE 6.5 SQ. FT. OF FREE AREA OR 48"X36" POTTORFF LOUVER . VERIFY EXACT SIZE AND LOCATION WITH ARCHITECT. PROVIDE ¼" INSECT SCREEN.
9. EXHAUST PIPING TO BE THERMALLY INSULATED. PROVIDE CONDENSATE DRAIN. THE DPF HOUSING SHALL BE SUPPORTED WITH AT LEAST 2 BEAMS RUNNING UNDERNEATH THE FEET. COMPLY WITH MANUFACTURER'S INSTALLATION LISTING REQUIREMENTS AND COORDINATE WITH STRUCTURAL ENGINEER.
10. HIGH WALL MOUNTED EXHAUST AIR LOUVER WITH ¼" INSECT SCREEN. VERIFY EXACT SIZE AND LOCATION WITH THE ARCHITECT. PROVIDE 3.4 FT2 OF FREE AREA.
11. PROVIDE FULLY LOUVERED DOOR OR DOOR LOUVER WITH MIN. 1.7 SQ. FT. OF FREE AREA. PROVIDE INSECT SCREEN. VERIFY EXACT SIZE AND LOCATION WITH THE ARCHITECT.
12. BOLT TOGETHER LOAD BANK BY GENERATOR MANUFACTURER. THE 100KW LOAD BANK WILL BE MOUNTED ON THE GENSET'S 172-INCH BELLY TANK, WITHOUT INCREASING THE OVERALL SYSTEM LENGTH.THE VENDOR WILL FACTORY-CONNECT THE LOAD BANK TO THE GENERATOR RADIATOR WITH A 3-INCH CONNECTION FIELD VERIFICATION OF SHOP DRAWINGS IS REQUIRED BEFORE POURING THE CONCRETE HOUSEKEEPING PAD.
13. BELLY TANK AND ASSOCIATED ACCESSORIES BY GENERATOR MANUFACTURER.
14. FACTORY SUPPLIED CONCENTRIC VENT ADAPTER. SEE DETAIL #1 ON SHEET M4.7
15. FACTORY SUPPLIED INLET GUARD ASSEMBLY. SEE DETAIL #1 ON SHEET M4.7
16. FACTORY SUPPLIED VENT TERMINAL ASSEMBLY (ELBOW). SEE DETAIL #1 ON SHEET M4.7
17. CONTRACTOR TO MAKE SURE THE MEANS OF SUSPENSION IS ADEQUATE TO SUPPORT THE WEIGHT OF THE UNITS. COORDINATE WITH STRUCTURAL ENGINEER AND VERIFY EXACT LOCATION WITH THE ARCHITECT.
18. INSTALL HEATER 11 FT. UP TO MAX. OF 12 FT. A.F.F. COORDINATE EXACT LOCATION WITH THE ARCHITECT.
19. PROVIDE CONDENSATE DRAIN PIPE. REFER TO PLUMBING PLAN FOR EXACT ROUTING ON THE FIELD.
20. 36"X8" (567 CFM) HIGH SIDEWALL EXHAUST REGISTER WITH MVD SET @567 CFM. KRUEGER MODEL S580H 0° DEFLECTION VERIFY EXACT SIZE & LOCATION WITH ARCHITECT.
21. FURNISH ALL NECESSARY COMPONENTS FOR A COMPLETE AND SECURE INSTALLATION. INSTALL IN FULL COMPLIANCE WITH THE MANUFACTURER'S INSTALLATION GUIDELINES. COORDINATE WITH THE STRUCTURAL ENGINEER TO VERIFY AND PROVIDE APPROPRIATE STRUCTURAL SUPPORT AND ATTACHMENT DETAILS TO ENSURE THE GAS HEATER IS SAFELY SUPPORTED BY THE BUILDING STRUCTURE.
22. BIG ASS FANS E SERIES HVLS CEILING FAN MODEL E12 (12 FT DIAMETER). 82.2 LB, 85 RPM, INPUT POWER AND BREAKER: 100-125 VAC, 50/60 HZ, 10A. SOUND AT MAXIMUM SPEED <35dBA. FURNISH ALL NECESSARY COMPONENTS FOR A COMPLETE AND SECURE INSTALLATION, INCLUDING BUT NOT LIMITED TO UPPER MOUNT AND UPPER MOUNTING BRACE, EXTENSION TUBE AND SAFETY CABLE, ANGLE IRON OR ANY ADDITIONAL STRUCTURAL SUPPORTS AS REQUIRED. INSTALL IN FULL COMPLIANCE WITH THE MANUFACTURER'S INSTALLATION GUIDELINES. FURNISH WIRED WALL CONTROLLER TO WALL SURFACE. COORDINATE WITH THE STRUCTURAL ENGINEER TO VERIFY AND PROVIDE APPROPRIATE STRUCTURAL SUPPORT AND ATTACHMENT DETAILS TO ENSURE THE FAN IS SAFELY SUPPORTED BY THE BUILDING STRUCTURE.
23. PROPOSED CONTROLLER LOCATION FOR CEILING FANS AND GAS HEATER. COORDINATE EXACT LOCATION WITH THE OWNER'S REPRESENTATIVE.
24. PROVIDE 6" HIGH CONCRETE PAD. TO BE 4" LARGER THAN THE FOOTPRINT OF BELLY TANK.
25. PROVIDE 18.0. SQ. FT. OF FREE AREA EXHAUST LOUVER OR 60" WIDE X 72" HIGH POTTORFF LOUVER. PROVIDE SHEET METAL PLENUM BEHIND LOUVER.
26. PROVIDE ACCESS PANEL BELOW THE FAN.

GENERAL NOTES

1. ALL DEBRIS SHALL BE DISPOSED OF IN AN APPROVED MANNER.
2. VERIFY THERMOSTAT/CONTROL LOCATION WITH ARCHITECT.
3. VERIFY EXACT LOCATION OF ALL SUPPLY, RETURN AND EXHAUST GRILLES, REGISTERS, GRILLES AND DIFFUSERS WITH INTERIOR DESIGNER AND ARCHITECT.
4. ALL HVAC DUCT SYSTEM SHALL CONSTRUCTED, INSTALLED AND INSULATED AS PROVIDED IN CHAPTER 6 OF CMC, 2022.
5. ALL HVAC EQUIPMENT SHALL BE APPROVED PRIOR TO INSTALLATION BY NATIONALLY RECOGNIZED STANDARDS AND EVIDENCED BY THE LISTING AND LABEL OF AN APPROVED AGENCY (CMC 302.1)
6. APPLIANCES DESIGNED TO BE FIXED IN POSITION SHALL BE SECURELY FASTENED IN PLACE, CMC 304.4.
7. PROVIDE TURNING VANES AT ELBOWS.
8. DUCT SYSTEMS USED WITH BLOWER TYPE EQUIPMENT WHICH ARE PORTIONS OF A HEATING, COOLING, ABSORPTION, EVAPORATIVE COOLING OR OUTDOOR AIR VENTILATION SYSTEM SHALL BE SIZED IN ACCORDANCE WITH CHAPTER 17 OF THE MECHANICAL CODE.
9. DUCT SIZES GIVEN ON THE PLAN ARE NET CLEAR INSIDE DIMENSIONS. ADD THICKNESS OF INSULATIONS TO OBTAIN THE ACTUAL DUCT SIZES (+2" ALL AROUND).
10. MAINTAIN MINIMUM OF 10 FEET SEPARATION BETWEEN OSA INTAKE HOOD OF MUA AND EXHAUST OUTLET OR PLUMBING VENT.
11. ALL NEW DUCTWORK SHALL BE PRESSURE TESTED BEFORE PROVIDING DUCTWORK INSULATION. CHECK AND REPAIR FOR LEAKS.
12. DUCT AIR LEAKAGE SHALL BE TESTED AND VERIFIED BY HERS RATER.
13. PROVIDE YOUNG REGULATORS REMOTE OPERATOR DAMPER WHERE CEILING IS NON-ACCESSIBLE.
14. PROVIDE A MINIMUM OF 15 C.F.M. OF OUTSIDE AIR PER OCCUPANT IN ALL PORTIONS OF THE BUILDING DURING SUCH TIME AS THE BUILDING IS OCCUPIED.

WILLIAM LOYD JONES
ARCHITECT
9415 culver boulevard
culver city, california
9 0 2 3 2
TEL 310 392 3995

ADDENDUM# 3 - BID SET - APRIL 30, 2026

KHALIFEH & ASSOCIATES
CONSULTING ENGINEERS
1625 W, OLYMPIC BLVD, #791, LOS ANGELES, CA 90
Tel: (310) 305-1555 Fax: (310) 305-1550
www.KhalifehAssociates.com
252671
REGISTERED PROFESSIONAL ENGINEER
JACK Y. KHALIFEH
No. M025454
Exp. SEPT. 2026
STATE OF CALIFORNIA

GENERATOR ROOM AND REMOTE APPARATUS BLOW UP PLAN

FIRE STATION 46
COUNTY OF LOS ANGELES FIRE DEPARTMENT
26720 BOMBERO LANE
VALENCIA, CALIFORNIA

FIVEPOINT Architecture

Issue	
LACoFD APPROVED	11.MAR.25
100% DD SET	17.APR.2
FIRE DEPARTMENT SUBMITTAL SET	20.MAY.25
PLAN CHECK SUBMITTAL SET	13.AUG.2
PLAN CHECK RESUBMITTAL SET	07.NOV.25
PLAN CHECK RESUBMITTAL SET	17.DEC.25

THE ABOVE DRAWINGS AND SPECIFICATIONS AND IDEAS, DESIGNS AND ARRANGEMENTS REPRESENTED THEREBY ARE AND SHALL REMAIN THE PROPERTY OF THE ARCHITECT, AND NO PART THEREOF SHALL BE COPIED, DISCLOSED TO OTHERS OR USED IN CONNECTION WITH ANY WORK OR PROJECT OTHER THAN THE SPECIFIC PROJECT FOR WHICH THEY HAVE BEEN PREPARED AND DEVELOPED WITHOUT THE WRITTEN CONSENT OF THE ARCHITECT. VISUAL CONTACT WITH THESE DRAWINGS AND SPECIFICATIONS SHALL CONSTITUTE CONCLUSIVE EVIDENCE OF ACCEPTANCE OF THESE RESTRICTIONS.

WRITTEN DIMENSIONS ON THESE DRAWINGS SHALL HAVE PRECEDENCE OVER SCALED DIMENSIONS. CONTRACTORS SHALL VERIFY AND BE RESPONSIBLE FOR ALL DIMENSIONS AND CONDITIONS ON THE JOB AND THIS OFFICE MUST BE NOTIFIED OF ANY VARIATIONS FROM THE DIMENSIONS AND CONDITIONS SHOWN BY THESE DRAWINGS. SHOP DETAILS MUST BE SUBMITTED TO THIS OFFICE FOR APPROVAL BEFORE PROCEEDING WITH FABRICATION.

Copyright 2005

Date	17.DEC.25
Drawn	BD
Checked	JK
Scale	1/8" = 1'-0"
Job. No.	

M3.1

Plot date : 2026-03-18

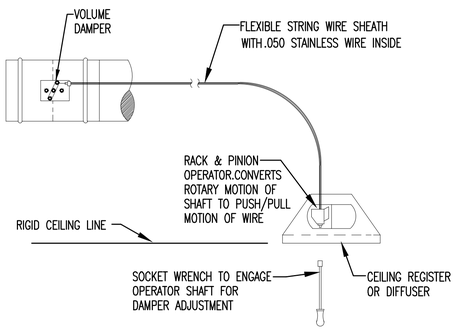

TYPICAL VOLUME DAMPER INSTALLATION OVER NON-ACCESSIBLE CEILING
BOWDE TYPE CABLE CONTROL (YOUNGS REGULATOR)

7 NTS

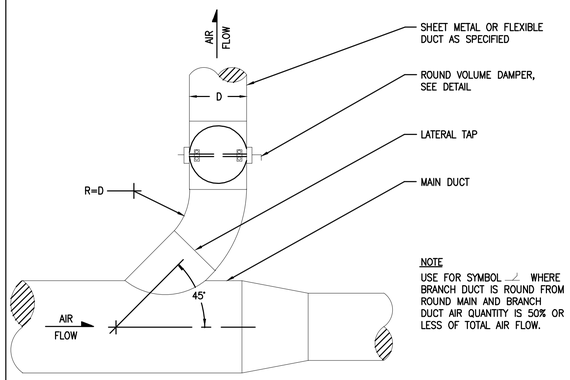

CIRCULAR DUCT LATERAL TAP WITH VOLUME DAMPER

6 NTS

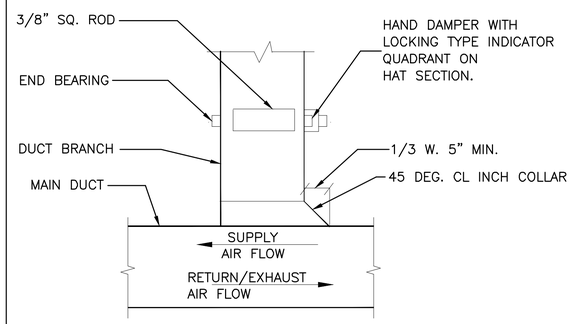

NOTES:
FURNISH THIS TYPE CONNECTION WHEN SINGLE–LINE DUCTWORK IS INDICATED AS THIS ⊥ FOR BRANCHES WITH LESS THAN 25% OF THE TOTAL AIR FLOW.

TYPICAL RECTANGULAR DUCT CONNECTION DETAIL

4 NTS

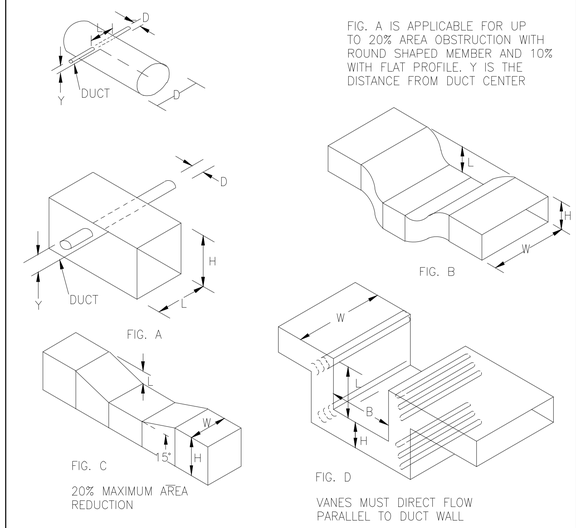

TYPICAL DUCT OBSTRUCTION DETAIL

2 NTS

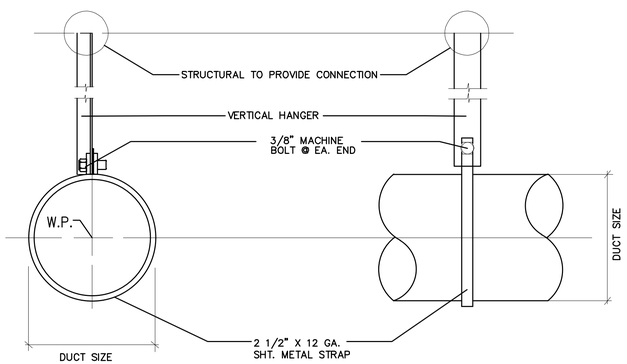

FOR DUCTS 36" DIA. AND BELOW COMPLY WITH THIS DETAIL

TABLE 4.2
MINIMUM HANGER SIZES FOR ROUND DUCT

DIA.	MAXIMUM SPACING	ROD	STRAP
10" DN	12'	1/4"	1" x 22 GA.
11–18"	12'	1/4"	1" x 22 GA.
19–24"	12'	1/4"	1" x 20 GA.
25–36"	12'	3/8"	1" x 20 GA.

NOTES:

1. STRAPS ARE GALVANIZED STEEL; RODS ARE UNCOATED OR GALVANIZED STEEL; WIRE IS BLACK ANNEALED, BRIGHT BASIC, OR GALVANIZED STEEL. ALL ARE ALTERNATIVES.
2. TABLE ALLOWS FOR CONVENTIONAL WALL THICKNESS, AND JOINT SYSTEMS PLUS ONE LB/SF (4.89 KG/SQ.M) INSULATION WEIGHT. IF HEAVIER DUCTS ARE TO BE INSTALLED, ADJUST HANGER SIZES TO BE WITHIN THEIR LOAD LIMITS; SEE ALLOWABLE LOADS WITH TABLE 4–1. HANGER SPACING MAY BE ADJUSTED BY SPECIAL ANALYSIS.
3. DESIGNERS: FOR INDUSTRIAL GRADE SUPPORTS, INCLUDING SADDLES, SINGLE LOAD TRAPEZE LOADS, LONGER SPANS AND FLANGE JOINT LOADS, SEE SMACNA'S ROUND INDUSTRIAL DUCT CONSTRUCTION STANDARDS.

BUILDING AND SAFETY DIVISION
Department of Public Works
FINAL ENERGY APPROVED
UNDER CCR TITLE 24, PART 1, ARTICLE 1 & PART 6
JMoon
PUBLIC WORKS
04/20/2026 10:58:04 AM
This set of plans and specifications must be kept at the job site at all times, and it is unlawful to make any changes, modifications or alterations to these plans or specifications without the prior written permission of the Building Official. The stamping of this set of plans and specifications SHALL NOT, under any circumstances, be deemed to permit or to be an approval of any work or activity that violates any provisions of any County Ordinance or State Law.

BUILDING AND SAFETY DIVISION
Department of Public Works
APPROVED
UNDER LOS ANGELES COUNTY CODE TITLE 29
JMoon
PUBLIC WORKS
04/20/2026 10:56:01 AM
This set of plans and specifications must be kept at the job site at all times, and it is unlawful to make any changes, modifications or alterations to these plans or specifications without the prior written permission of the Building Official. The stamping of this set of plans and specifications SHALL NOT, under any circumstances, be deemed to permit or to be an approval of any work or activity that violates any provisions of any County Ordinance or State Law.

MINIMUM HANGER SIZES FOR ROUND DUCT

5 NTS

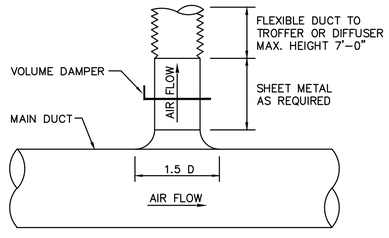

NOTES:
FURNISH THIS TYPE OF CONNECTION WHEN SINGLE–LINE DUCTWORK IS INDICATED AS THIS ⊥ FOR BRANCHES WITH LESS THAN 25% OF THE TOTAL AIR FLOW.

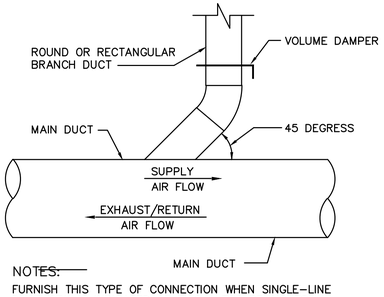

NOTES:
FURNISH THIS TYPE OF CONNECTION WHEN SINGLE–LINE DUCTWORK IS INDICATED AS THIS ⊥ FOR BRANCHES WITH LESS THAN 25% OF THE TOTAL AIR FLOW.

ROUND DUCT BRANCH CONNECTION

3 NTS

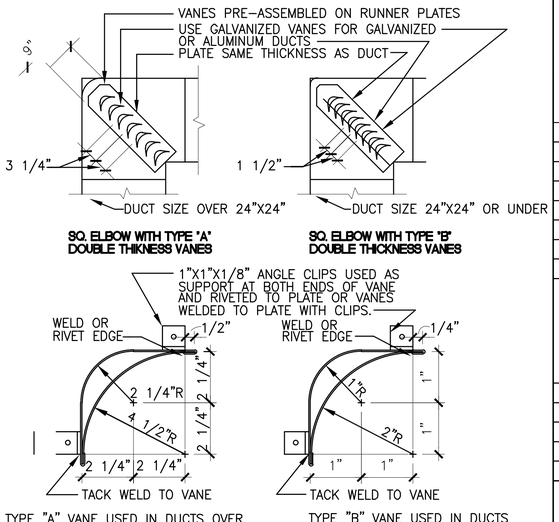

TYPE "A" VANE USED IN DUCTS OVER 24"X24" SAME GAGE THICKNESS AS DUCT NOT TO EXCEED 20 U.S. GAGE.

TYPE 'A' VANE CONSTRUCTION

TYPE "B" VANE USED IN DUCTS 24"X24" AND UNDER SAME GAGE THICKNESS AS DUCT.

TYPE 'B' VANE CONSTRUCTION

TYPICAL TURNING VANE DETAIL

1 NTS

WILLIAM LOYD JONES ARCHITECT
9415 culver boulevard
culver city, california
9 0 2 3 2
TEL 3IO 392 3995

ADDENDUM# 3 - BID SET - APRIL 30, 2026

KHALIFEH & ASSOCIATES
CONSULTING ENGINEERS
1625 W. OLYMPIC BLVD. #791, LOS ANGELES, CA 90
Tel: (310) 305-1555 Fax: (310) 305-1550
www.KhalifehAssociates.com
252671
REGISTERED PROFESSIONAL ENGINEER JACK Y. KHALIFEH No. M025454 Exp. SEPT. 2026 STATE OF CALIFORNIA

MECHANICAL DETAILS

FIRE STATION 46
COUNTY OF LOS ANGELES FIRE DEPARTMENT
26720 BOMBERO LANE
VALENCIA, CALIFORNIA

FIVEPOINT LA Project

Issue	
LACoFD APPROVED	11.MAR.25
100% DD SET	17.APR.25
FIRE DEPARTMENT SUBMITTAL SET	20.MAY.25
PLAN CHECK SUBMITTAL SET	13.AUG.25
PLAN CHECK RESUBMITTAL SET	07.NOV.25
PLAN CHECK RESUBMITTAL SET	17.DEC.25

THE ABOVE DRAWINGS AND SPECIFICATIONS AND IDEAS, DESIGNS AND ARRANGEMENTS REPRESENTED THEREBY ARE AND SHALL REMAIN THE PROPERTY OF KHALIFEH & ASSOCIATES. THEY ARE NOT TO BE USED OR MODIFIED TO OTHERS OR USED IN CONNECTION WITH ANY WORK OR PROJECT OTHER THAN THE SPECIFIC PROJECT FOR WHICH THEY HAVE BEEN PREPARED AND DEVELOPED WITHOUT THE WRITTEN CONSENT OF THE ARCHITECT. ANY CONTACT WITH THESE DRAWINGS OR SPECIFICATIONS SHALL CONSTITUTE CUMULATIVE EVIDENCE OF ACCEPTANCE OF THESE RESTRICTIONS.

WRITTEN DIMENSIONS ON THESE DRAWINGS SHALL HAVE PRECEDENCE OVER SCALED DIMENSIONS. CONTRACTOR SHALL VERIFY AND BE RESPONSIBLE FOR ALL DIMENSIONS AND CONDITIONS ON THE JOB AND THIS OFFICE SHALL BE NOTIFIED OF ANY VARIATIONS FROM THE DIMENSIONS AND CONDITIONS SHOWN ON THESE DRAWINGS AND SPECIFICATIONS SUBMITTED TO THIS OFFICE FOR APPROVAL BEFORE PROCEEDING WITH FABRICATION.

Copyright 2005

Date	17.DEC.25
Drawn	BDL
Checked	JK
Scale	NTS
Job. No.	

M4.1

Plot date : 2026-03-18

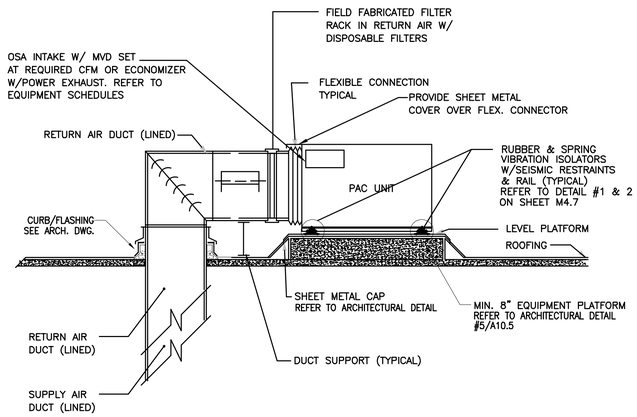

TYPICAL PACKAGE AIR CONDITIONING UNIT INSTALLATION DETAIL (SIDE OUTLET/INLET) 6 NTS

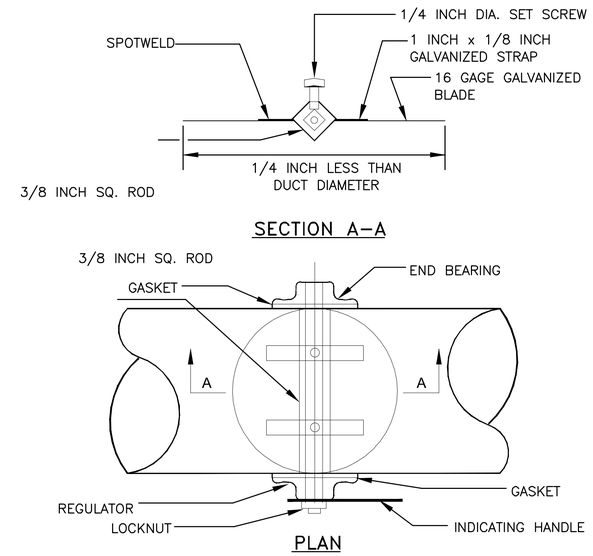

TYPICAL ROUND VOLUME DAMPER DETAIL (UP TO 14"Ø) 4 NTS

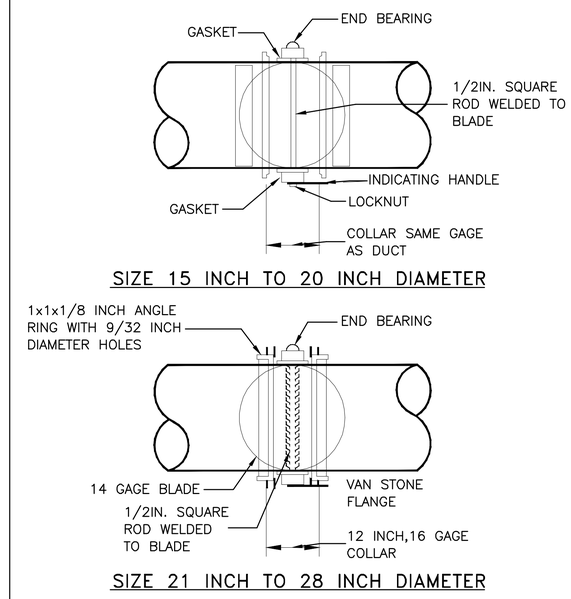

TYPICAL ROUND VOLUME DAMPER DETAIL (ABOVE 14"Ø) 2 NTS

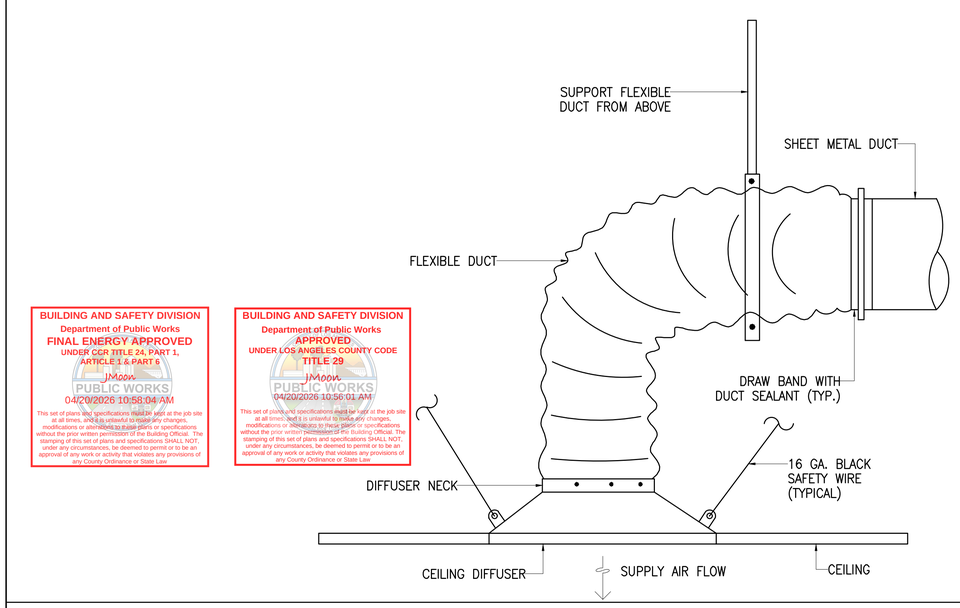

BUILDING AND SAFETY DIVISION
Department of Public Works
FINAL ENERGY APPROVED
UNDER CCR TITLE 24, PART 1, ARTICLE 1 & PART 6
JMoov
PUBLIC WORKS
04/20/2026 10:56:04 AM
This set of plans and specifications must be kept at the job site at all times, and it is unlawful to make any changes, modifications or alterations to these plans or specifications without the prior written permission of the Building Official. The stamping of this set of plans and specifications SHALL NOT, under any circumstances, be deemed to permit or to be an approval of any work or activity that violates any provisions of any County Ordinance or State Law

BUILDING AND SAFETY DIVISION
Department of Public Works
APPROVED
UNDER LOS ANGELES COUNTY CODE TITLE 29
JMoov
PUBLIC WORKS
04/20/2026 10:56:01 AM
This set of plans and specifications must be kept at the job site at all times, and it is unlawful to make any changes, modifications or alterations to these plans or specifications without the prior written permission of the Building Official. The stamping of this set of plans and specifications SHALL NOT, under any circumstances, be deemed to permit or to be an approval of any work or activity that violates any provisions of any County Ordinance or State Law

TYPICAL SUPPLY AIR DIFFUSER DETAIL 5 NTS

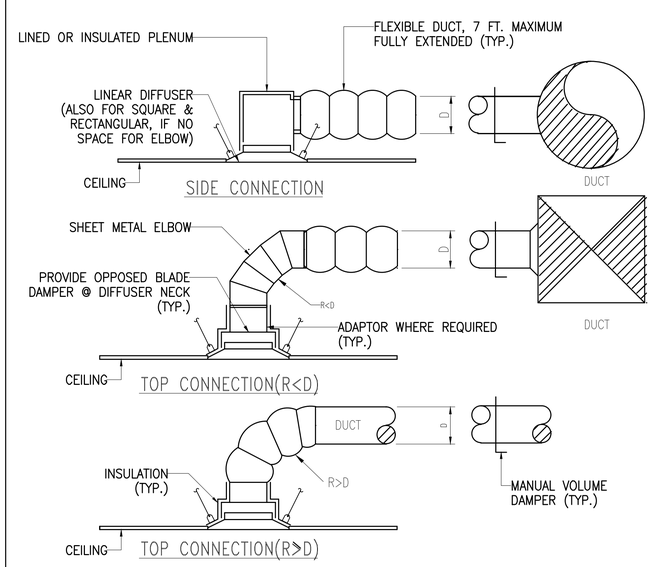

TYPICAL CEILING DIFFUSER CONNECTION DETAIL 3 NTS

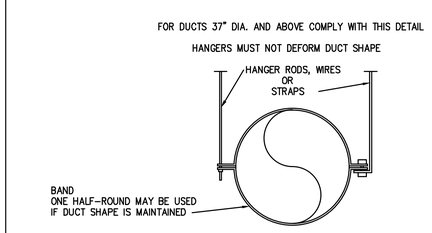

TABLE 4.2
MINIMUM HANGER SIZES FOR ROUND DUCT

DIA.	MAXIMUM SPACING	WIRE DIA.	ROD	STRAP
37–50" 1270 MM	12' 3.7 M	→	TWO 3/8" TWO 9.5 MM	TWO 1" x 20 GA. (2) 25.4 x 1.31 MM
51–60" 1520 MM	12' 3.7 M	→	TWO 3/8" TWO 9.5 MM	TWO 1" x 18 GA. (2) 25.4 x 1.31 MM
61–84" 2130 MM	12' 3.7 M	→	TWO 3/8" TWO 9.5 MM	TWO 1" x 16 GA. (2) 25.4 x 1.61 MM

NOTES:

1. STRAPS ARE GALVANIZED STEEL; RODS ARE UNCOATED OR GALVANIZED STEEL; WIRE IS BLACK ANNEALED, BRIGHT BASIC, OR GALVANIZED STEEL. ALL ARE ALTERNATIVES.
2. TABLE ALLOWS FOR CONVENTIONAL WALL THICKNESS, AND JOINT SYSTEMS PLUS ONE LB/SF (4.89 KG/SQ.M) INSULATION WEIGHT. IF HEAVIER DUCTS ARE TO BE INSTALLED, ADJUST HANGER SIZES TO BE WITHIN THEIR LOAD LIMITS; SEE ALLOWABLE LOADS WITH TABLE 4–1. HANGER SPACING MAY BE ADJUSTED BY SPECIAL ANALYSIS.
3. DESIGNERS: FOR INDUSTRIAL GRADE SUPPORTS, INCLUDING SADDLES, SINGLE LOAD TRAPEZE LOADS, LONGER SPANS AND FLANGE JOINT LOADS, SEE SMACNA'S ROUND INDUSTRIAL DUCT CONSTRUCTION STANDARDS.

MINIMUM HANGER SIZES FOR ROUND DUCT 1 NTS

WILLIAM LOYD JONES ARCHITECT
9415 culver boulevard
culver city, california
9 0 2 3 2
TEL 310 392 3995

KHALIFEH & ASSOCIATES
CONSULTING ENGINEERS
1625 W. OLYMPIC BLVD. #791, LOS ANGELES, CA 90015
Tel: (310) 305-1555 Fax: (310) 305-1550
www.KhalifehAssociates.com
252671
REGISTERED PROFESSIONAL ENGINEER JACK Y. KHALIFEH No. M025454 Exp. SEPT. 2026 STATE OF CALIFORNIA

MECHANICAL DETAILS

FIRE STATION 46
COUNTY OF LOS ANGELES FIRE DEPARTMENT
26720 BOMBERO LANE
VALENCIA, CALIFORNIA

FIVEPOINT Los Angeles

Issue	
LACoFD APPROVED	11.MAR.25
100% DD SET	17.APR.25
FIRE DEPARTMENT SUBMITTAL SET	20.MAY.25
PLAN CHECK SUBMITTAL SET	13.AUG.25
PLAN CHECK RESUBMITTAL SET	07.NOV.25
PLAN CHECK RESUBMITTAL SET	17.DEC.25

THE ABOVE DRAWINGS AND SPECIFICATIONS AND IDEAS, DESIGNS AND ARRANGEMENTS REPRESENTED THEREIN ARE THE PROPERTY OF THE ARCHITECT AND ARE NOT TO BE DISCLOSED TO OTHERS OR USED IN CONNECTION WITH ANY WORK OR PROJECT OTHER THAN THE SPECIFIC PROJECT FOR WHICH THEY HAVE BEEN PREPARED AND DEVELOPED WITHOUT THE WRITTEN CONSENT OF THE ARCHITECT. ANY USE IN CONTRACT WITH THESE DRAWINGS OR SPECIFICATIONS SHALL CONSTITUTE CONCLUSIVE EVIDENCE OF ACCEPTANCE OF THESE RESTRICTIONS.

WRITTEN DIMENSIONS ON THESE DRAWINGS SHALL HAVE PRECEDENCE OVER SCALED DIMENSIONS. CONTRACTORS SHALL VERIFY AND BE RESPONSIBLE FOR ALL DIMENSIONS AND CONDITIONS ON THE JOB AND THIS OFFICE MUST BE NOTIFIED OF ANY VARIATIONS AND DISCREPANCIES BEFORE PROCEEDING WITH THE WORK. SHOP DETAILS MUST BE SUBMITTED TO THIS OFFICE FOR APPROVAL BEFORE PROCESSING WITH FABRICATION.

Copyright 2005

Date	17.DEC.25
Drawn	BDL
Checked	JK
Scale	NTS
Job. No.	

M4.2

ADDENDUM# 3 - BID SET - APRIL 30, 2026

Plot date : 2026-03-18

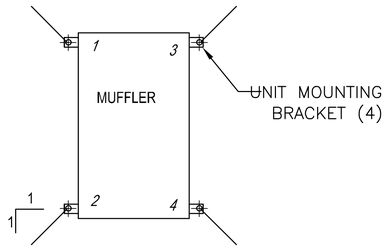

PLAN VIEW

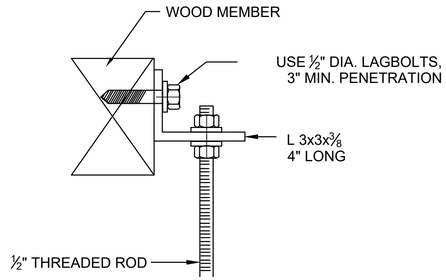

ANCHORAGE IN WOOD

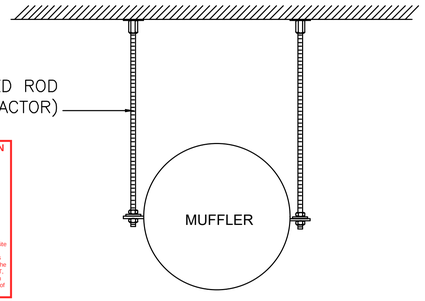

BUILDING AND SAFETY DIVISION
Department of Public Works
FINAL ENERGY APPROVED
UNDER CCR TITLE 24, PART 1, ARTICLE 1.6, PART 6
JMoore
PUBLIC WORKS
04/20/2026 10:58:04 AM
This set of plans and specifications must be kept at the job site at all times, and it is unlawful to make any changes, modifications or alterations to these plans or specifications without the prior written permission of the Building Official. The stamping of this set of plans and specifications SHALL NOT, under any circumstances, be deemed to permit or to be an approval of any work or activity that violates any provisions of any County Ordinance or State Law

BUILDING AND SAFETY DIVISION
Department of Public Works
APPROVED
UNDER LOS ANGELES COUNTY CODE TITLE 29
JMoore
PUBLIC WORKS
04/20/2026 10:56:01 AM
This set of plans and specifications must be kept at the job site at all times, and it is unlawful to make any changes, modifications or alterations to these plans or specifications without the prior written permission of the Building Official. The stamping of this set of plans and specifications SHALL NOT, under any circumstances, be deemed to permit or to be an approval of any work or activity that violates any provisions of any County Ordinance or State Law

MUFFLER INSTALLATION DETAILS | 2 | NTS

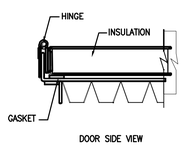

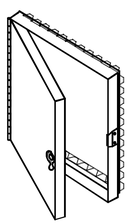

ACCESSORIES

- 22 GAUGE GALVANIZED STEEL DOOR:
- CLOSED CELL NEOPRENE GASKET:
- 1" FLANGED FRAME: HAD-60F

SPECIFICATIONS

- 22 GAUGE GALVANIZED STEEL FRAME
- 24 GAUGE GALVANIZED STEEL DOUBLE-WALL DOOR
- 1" THICK FIBERGLASS INSULATION.
- ZINC PLATED CONTINOUS PIANO TYPE HINGE (HAD MODELS ONLY)
- DOOR-TO-FRAME & FRAME-TO-DUCT FOAM GASKET
- HAD MODELS W/ 'B'<14" HAVE ONE LOCK, DOORS W>14" HAVE TWO LOCKS. CAD MODELS W/ 'B'<14" HAVE TWO LOCKS, DOORS WITH B>14" HAVE FOUR LOCKS. OUTSIDE FRAME SIZE FITS HOLE 1" SMALLER THAN DOOR SIZE. MINIMUM SIZE IS 6"W X 4"H, MAXIMUM SIZE IS 24"W X 24"H

DUCT ACCESS PANEL DETAIL | 4 | NTS

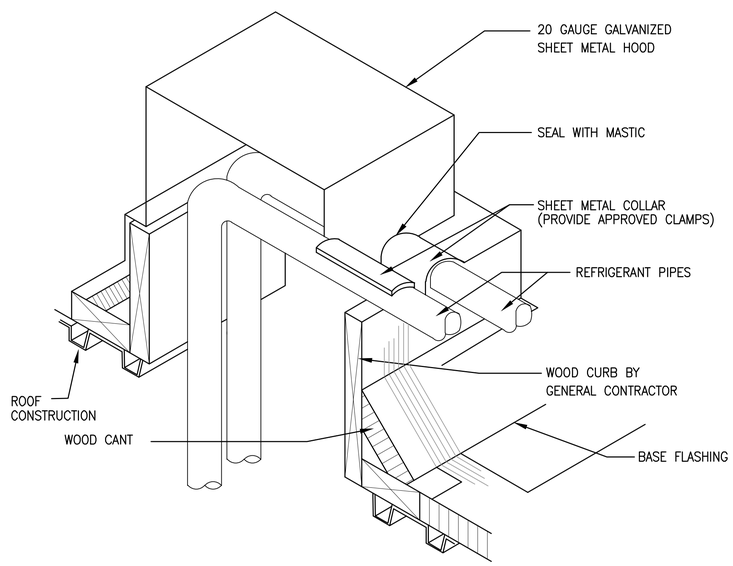

NOTE:
(1) SIMILAR FOR ROOF CURB DETAIL OF DUCT PENETRATION THRU ROOF
(2) PROVIDE PIPE SUPPORT AS REQUIRED.

TYPICAL PIPING THRU ROOF DETAIL | 3 | NTS

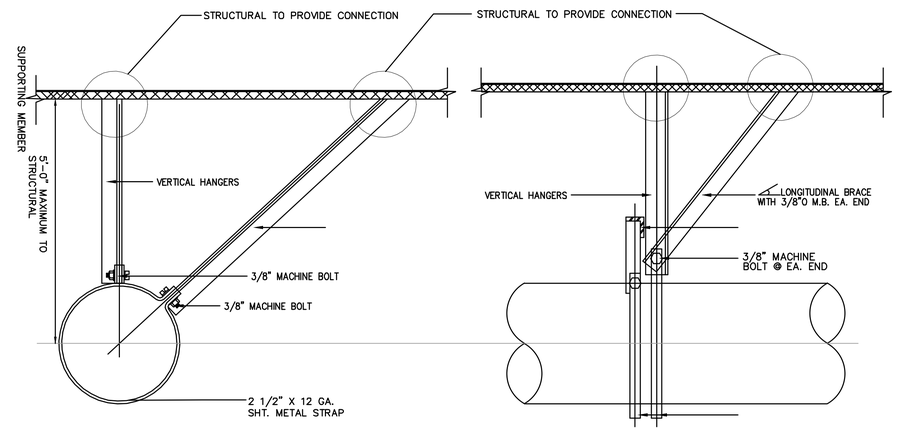

FOR DUCTS 28" DIA. AND BELOW COMPLY WITH THIS DETAIL

DUCT SIZE (in.)	VERTICAL HANGERS ANGLES (in.)	DIAGONAL BRACES ANGLE PIPE (CABLE SIZE) (in.)	BOLT SIZE (in.)	MAX WT. PER FT. (lb.)	REMARKS
28	L2 x 2 x 16 ga	L2x2x16ga (1/4in. cable)	3/8	12	SINGLE HANGER
36	L2 x 2 x 16 ga	L2x2x16ga (1/4in. cable)	3/8	16	DOUBLE HANGER
48	L2 x 2 x 16 ga	L2x2x16ga (1/4in. cable)	3/8	21	DOUBLE HANGER
60	L3 x 3 x 16 ga	L4x4x14ga (1/4in. cable)	3/8	34	DOUBLE HANGER
84	L3 x 3 x 16 ga	L4x4x14ga (1/4in. cable)	1/2	69	DOUBLE HANGER

* TABLE BASED ON SMACNA SEISMIC HAZARD LEVEL A
* PROVIDE TRANSVERSE BRACING AT 30FT AND LONGITUDIAL BRACING AT 60FT.
* FOR LESS THAN 12" IN DISTANCE, BRACING IS NOT REQUIRED
* SINGLE HANGER ROUND DUCT SUPPORT SHALL HAVE LONGITUDINAL BRACES AT SAME SPACING AS THE TRANSVERSE BRACING

MAX.DUCT DIMENSION	VERTICAL HANGERS	DIAGONAL BRACES	HORIZONTAL BRACES	LONGITUDINAL BRACES	BOLT SIZE
UP TO 60"	L3x3x1/4	L3X3X12ga (1/4"cable)	L3x3x16ga	L3X3X12ga (1/4"cable)	1/2"ø
UP TO 84"	L5x3x1/4"	L3X3X12ga (3/8"cable)	L4x4x16ga	L3X3X12ga (3/8"cable)	5/8"ø
UP TO 96"	L5x3x3/8"	L4X4X12ga (3/8"cable)	L4x4x12ga	L4X4X12ga (3/8"cable)	5/8"ø

* TABLE BASED ON SMACNA SEISMIC HAZARD LEVEL A
* FOR LESS THAN 12" IN DISTANCE, BRACING IS NOT REQUIRED
* PROVIDE TRANSVERSE BRACING AT 30FT AND LONGITUDIAL BRACING AT 60FT.

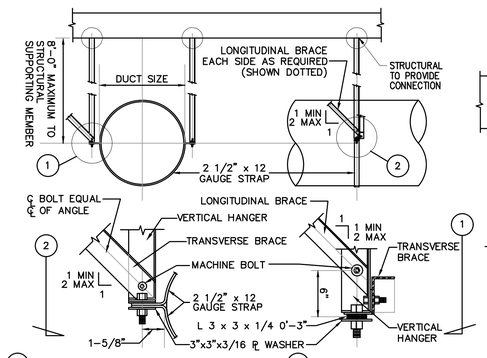

DUCT SIZE (in.)	VERTICAL HANGERS ANGLES (in.)	DIAGONAL BRACES ANGLE PIPE (CABLE SIZE) (in.)	BOLT SIZE (in.)	MAX WT. PER FT. (lb.)	REMARKS
28	L2 x 2 x 16 ga	L2x2x16ga (1/4in. cable)	3/8	12	SINGLE HANGER
36	L2 x 2 x 16 ga	L2x2x16ga (1/4in. cable)	3/8	16	DOUBLE HANGER
48	L2 x 2 x 16 ga	L2x2x16ga (1/4in. cable)	3/8	21	DOUBLE HANGER
60	L3 x 3 x 16 ga	L4x4x14ga (1/4in. cable)	3/8	34	DOUBLE HANGER
84	L3 x 3 x 16 ga	L4x4x14ga (1/4in. cable)	1/2	69	DOUBLE HANGER

* TABLE BASED ON SMACNA SEISMIC HAZARD LEVEL A
* PROVIDE TRANSVERSE BRACING AT 30FT AND LONGITUDIAL BRACING AT 60FT.
* FOR LESS THAN 12" IN DISTANCE, BRACING IS NOT REQUIRED

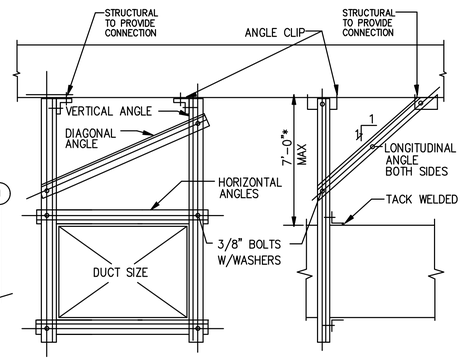

MAX.DUCT DIMENSION	VERTICAL HANGERS	DIAGONAL BRACES	HORIZONTAL BRACES	LONGITUDINAL BRACES	BOLT SIZE
UP TO 60"	L3x3x1/4	L3X3X12ga (1/4"cable)	L3x3x16ga	L3X3X12ga (1/4"cable)	1/2"ø
UP TO 84"	L5x3x1/4"	L3X3X12ga (3/8"cable)	L4x4x16ga	L3X3X12ga (3/8"cable)	5/8"ø
UP TO 96"	L5x3x3/8"	L4X4X12ga (3/8"cable)	L4x4x12ga	L4X4X12ga (3/8"cable)	5/8"ø

* TABLE BASED ON SMACNA SEISMIC HAZARD LEVEL A
* FOR LESS THAN 12" IN DISTANCE, BRACING IS NOT REQUIRED
* PROVIDE TRANSVERSE BRACING AT 30FT AND LONGITUDIAL BRACING AT 60FT.

FOR DUCTS 30" DIA. AND ABOVE COMPLY WITH THIS DETAIL

SEISMIC BRACING FOR RECTANGULAR & ROUND DUCT | 1 | NTS

WILLIAM LOYD JONES ARCHITECT
9415 culver boulevard
culver city, california
9 0 2 3 2
TEL 310 392 3995

ADDENDUM# 3 - BID SET - APRIL 30, 2026

KHALIFEH & ASSOCIATES
CONSULTING ENGINEERS
1625 W. OLYMPIC BLVD. #791, LOS ANGELES, CA 90
Tel: (310) 305-1555 Fax: (310) 305-1550
www.KhalifehAssociates.com
252671
REGISTERED PROFESSIONAL ENGINEER JACK T. KHALIFEH No. M025454 Exp. SEPT. 2026 STATE OF CALIFORNIA

MECHANICAL DETAILS

FIRE STATION 46
COUNTY OF LOS ANGELES FIRE DEPARTMENT
26720 BOMBERO LANE
VALENCIA, CALIFORNIA

FIVEPOINT Los Angeles

Issue	
LACoFD APPROVED	11.MAR.25
100% DD SET	17.APR.25
FIRE DEPARTMENT SUBMITTAL SET	20.MAY.25
PLAN CHECK SUBMITTAL SET	13.AUG.25
PLAN CHECK RESUBMITTAL SET	07.NOV.25
PLAN CHECK RESUBMITTAL SET	17.DEC.25

THE GROSS DRAWINGS AND SPECIFICATIONS AND SMALL SKETCHES AND MASKINGPENCILS REPRESENTED THEREIN ARE AND SHALL REMAIN THE PROPERTY OF THE ARCHITECT, AND NO PART THEREOF SHALL BE COPIED, DISCLOSED TO OTHERS OR USED IN CONNECTION WITH ANY WORK OR PROJECT OTHER THAN THE SPECIFIC PROJECT FOR WHICH THEY HAVE BEEN PREPARED AND DEVELOPED WITHOUT THE WRITTEN CONSENT OF THE ARCHITECT. ANY CONTACT WITH THESE DRAWINGS OR SPECIFICATIONS SHALL CONSTITUTE CONCLUSIVE EVIDENCE OF ACCEPTANCE OF THESE RESTRICTIONS.

WRITTEN DIMENSIONS ON THESE DRAWINGS SHALL HAVE PRECEDENCE OVER SCALED DIMENSIONS. CONTRACTORS SHALL VERIFY AND BE RESPONSIBLE FOR ALL DIMENSIONS. CONTRACTORS SHALL NOTIFY THE ARCHITECT WHO WILL BE NOTIFIED OF ANY VARIATIONS FROM THE DIMENSIONS AND CONDITIONS SHOWN BY THESE DRAWINGS. SHOP DETAILS MUST BE SUBMITTED TO THIS OFFICE FOR APPROVAL BEFORE PROCEEDING WITH FABRICATION.
Copyright 2005

Date	17.DEC.25
Drawn	BDL
Checked	JK
Scale	NTS
Job. No.	

M4.3

Plot date : 2026-03-18

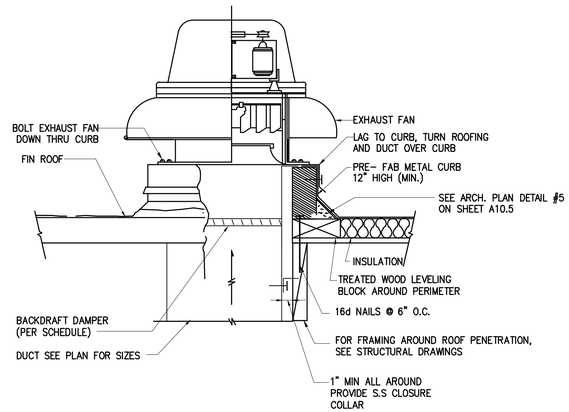

TYPICAL FOR EF-4, EF-7 , EF-8, EF-9 AND EF-10

ROOF MOUNTED EXHAUST FAN DETAIL | 7 | NTS

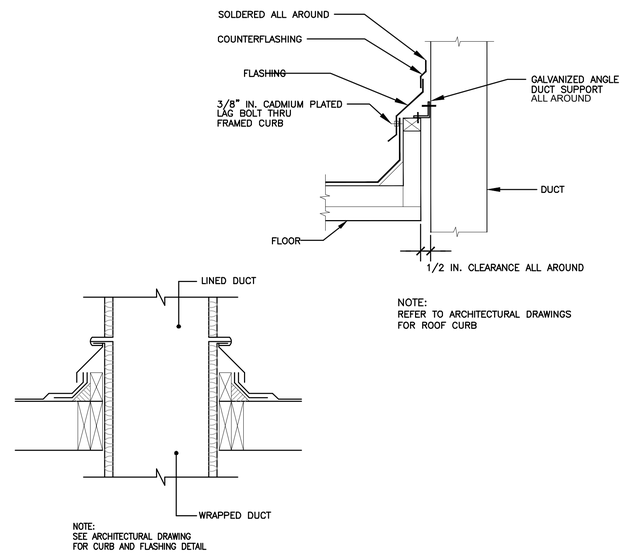

TYPICAL INSULATED AND UNINSULATED DUCT THRU ROOF PENETRATION DETAIL | 4 | NTS

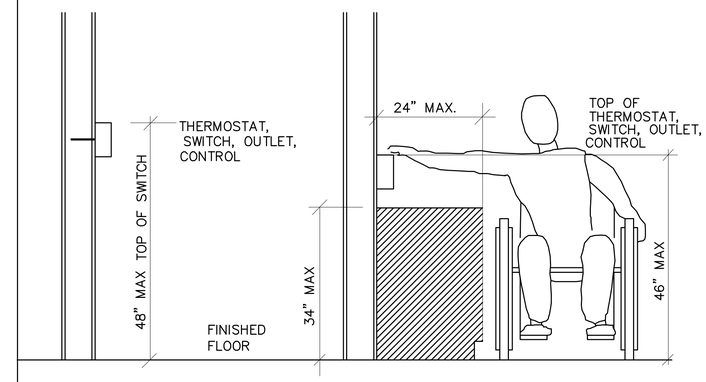

MOUNTING HEIGHT OVER OBSTRUCTION

TYPICAL THERMOSTAT MOUNTING HEIGHT DETAIL | 2 | NTS

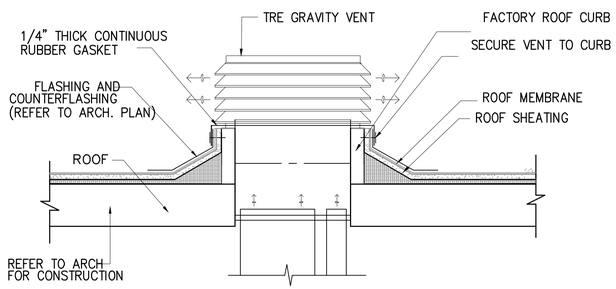

TYPICAL FOR GV-1 AND GV-2

NOTE:

PROVIDE BACKDRAFT DAMPER AND FILTER FOR OUTSIDE AIR INTAKE GRAVITY VENTILATORS. SEE PLAN AND SCHEDULES FOR FILTERS REQUIREMENT.

GRAVITY VENTILATOR | 6 | NTS

BUILDING AND SAFETY DIVISION
Department of Public Works
FINAL ENERGY APPROVED
UNDER CCR TITLE 24, PART 1, ARTICLE 1 & PART 6
JMoore
PUBLIC WORKS
04/20/2026 10:58:05 AM
This set of plans and specifications must be kept at the job site at all times, and it is unlawful to make any changes, modifications or alterations to these plans or specifications without the prior written permission of the Building Official. The stamping of this set of plans and specifications SHALL NOT, under any circumstances, be deemed to permit or to be an approval of any work or activity that violates any provisions of any County Ordinance or State Law

BUILDING AND SAFETY DIVISION
Department of Public Works
APPROVED
UNDER LOS ANGELES COUNTY CODE TITLE 29
JMoore
PUBLIC WORKS
04/20/2026 10:56:01 AM
This set of plans and specifications must be kept at the job site at all times, and it is unlawful to make any changes, modifications or alterations to these plans or specifications without the prior written permission of the Building Official. The stamping of this set of plans and specifications SHALL NOT, under any circumstances, be deemed to permit or to be an approval of any work or activity that violates any provisions of any County Ordinance or State Law

CONDENSATE DRAIN PIPE SCHEDULE			
UNIT	NOMINAL TONS	DRAIN SIZE (IN.)	"X" (IN.)
PAC-1 THRU PAC-2	SEE MECH. SCHEDULE	3/4"	1" MIN.

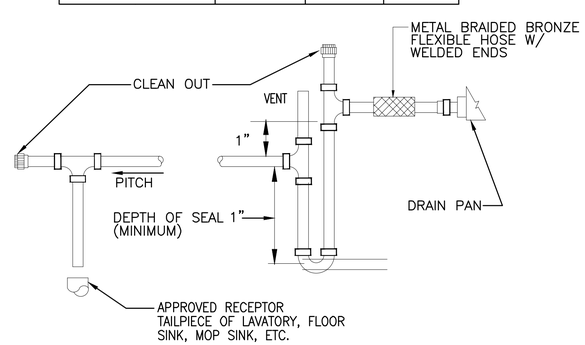

TYPICAL CONDENSATE DRAIN TRAP PIPING DETAIL | 3 | NTS

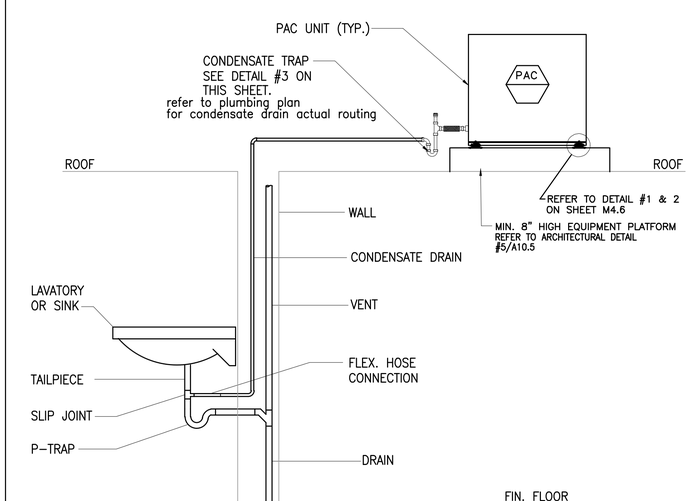

TYPICAL CONDENSATE DRAIN PIPING DETAIL | 1 | NTS

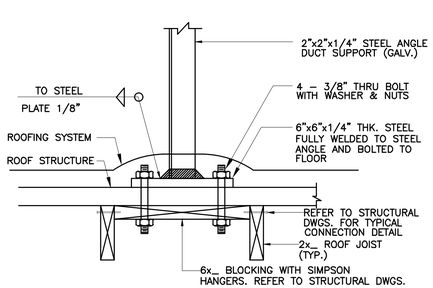

TYPICAL DUCT AND PIPE SUPPORT DETAIL | 5 | NTS

WILLIAM LOYD JONES ARCHITECT
9415 culver boulevard
culver city, california
9 0 2 3 2
TEL 310 392 3995

KHALIFEH & ASSOCIATES
CONSULTING ENGINEERS
1625 W. OLYMPIC BLVD. #791, LOS ANGELES, CA 90015
Tel: (310) 305-1555 Fax: (310) 305-1550
www.KhalifehAssociates.com
252671
REGISTERED PROFESSIONAL ENGINEER JACK T. KHALIFEH No. M025454 Exp. SEPT. 2026 STATE OF CALIFORNIA

MECHANICAL DETAILS

FIRE STATION 46
COUNTY OF LOS ANGELES FIRE DEPARTMENT
26720 BOMBERO LANE
VALENCIA, CALIFORNIA

FIVEPOINT Project

Issue	
LACoFD APPROVED	11.MAR.25
100% DD SET	17.APR.25
FIRE DEPARTMENT SUBMITTAL SET	20.MAY.25
PLAN CHECK SUBMITTAL SET	13.AUG.25
PLAN CHECK RESUBMITTAL SET	07.NOV.25
PLAN CHECK RESUBMITTAL SET	17.DEC.25

THE ABOVE DRAWINGS AND SPECIFICATIONS AND IDEAS, DESIGNS AND ARRANGEMENTS REPRESENTED THEREIN ARE AND SHALL REMAIN THE PROPERTY OF THE ARCHITECT AND ENGINEERS, AND WERE CREATED, EVOLVED AND DEVELOPED FOR USE ON AND IN CONNECTION WITH THE SPECIFIED PROJECT. NONE OF THE OTHER THAN THE SPECIFIED PROJECT FOR WHICH THEY HAVE BEEN PREPARED AND DEVELOPED MAY BE USED BY ANY PERSON FOR ANY PURPOSE OTHER THAN IN CONTACT WITH THESE DRAWINGS OR SPECIFICATIONS SHALL CONSTITUTE CONCLUSIVE EVIDENCE OF ACCEPTANCE OF THESE RESTRICTIONS.

WRITTEN DIMENSIONS ON THESE DRAWINGS SHALL HAVE PRECEDENCE OVER SCALED DIMENSIONS. CONTRACTORS SHALL VERIFY AND BE RESPONSIBLE FOR ALL DIMENSIONS AND CONDITIONS ON THE JOB AND THIS OFFICE MUST BE NOTIFIED OF ANY VARIATIONS AFFECTING THE WORK HEREIN SHOWN. SHOP DRAWINGS, SHOP DETAILS, SPECIMENS SHOULD BE SUBMITTED TO THIS OFFICE FOR APPROVAL BEFORE PROCESSING WITH FABRICATION.

Copyright 2005

Date	17.DEC.25
Drawn	BDL
Checked	JKH
Scale	NTS
Job. No.	

M4.4

Plot date : 2026-03-18

ADDENDUM# 3 - BID SET - APRIL 30, 2026

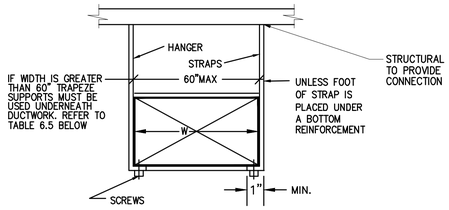

FOR DUCT SIZES 60" AND SMALLER

TABLE 4–1
RECTANGULAR DUCT HANGERS
MINIMUM SIZE

MAXIMUM HALF OF DUCT PERIMETER (*)	PAIR AT 10 FT. SPACING			PAIR AT 8 FT. SPACING			PAIR AT 5 FT. SPACING			PAIR AT 4 FT. SPACING		
	STRAP	WIRE/ROD	FASTENER	STRAP	WIRE/ROD	FASTENER	STRAP	WIRE/ROD	FASTENER	STRAP	WIRE/ROD	FASTENER
P/2 = 30"	1"x22 GA.	10 GA. (0.135")	(2) NO. 10 OR (1) 1/4" BOLT	1"x22 GA.	10 GA. (0.135")	(2) NO. 10 OR (1) 1/4" BOLT	1" x 22 GA.	12 GA. (0.106")	(2) NO. 10 OR (1) 1/4" BOLT	1" x 22 GA.	12 GA. (0.135")	(2) NO. 10 OR (1) 1/4" BOLT
P/2 = 72"	1"x18 GA.	3/8"	(2) NO. 10 OR (1) 1/4" BOLT	1"x20 GA.	1/4"	(2) NO. 10 OR (1) 1/4" BOLT	1" x 22 GA.	1/4"	(2) NO. 10 OR (1) 1/4" BOLT	1" x 22 GA.	1/4"	(2) NO. 10 OR (1) 1/4" BOLT
P/2 = 96"	1"x16 GA.	3/8"	(2) 1/4" BOLT	1"x18 GA.	3/8"	(2) NO. 10 OR (1) 1/4" BOLT	1" x 20 GA.	3/8"	(2) NO. 10 OR (1) 1/4" BOLT	1" x 22 GA.	1/4"	(2) NO. 10 OR (1) 1/4" BOLT

NOTES:
1. STRAPS ARE GALVANIZED STEEL; RODS ARE UNCOATED OR GALVANIZED STEEL; WIRE IS BLACK ANNEALED, BRIGHT BASIC, OR GALVANIZED STEEL. ALL ARE ALTERNATIVES.

(*) MAXIMUM DUCT WIDTH OF 60"

SINGLE HANGER MAXIMUM ALLOWABLE LOAD

STRAP	WIRE OR ROD (Dia.)
1" x 22 ga. –260 lbs.	0.106"–80 lbs.
1" x 20 ga. –320 lbs.	0.135"–120 lbs.
1" x 18 ga. –420 lbs.	0.162"–160 lbs.
1" x 16 ga. –700 lbs.	1/4"–270 lbs.
1" 1/2" x 16 ga. –1100 lbs.	3/8"–680 lbs.
	1/2"–1250 lbs.
	5/8"–2000 lbs.
	3/4"–3000 lbs.

MINIMUM HANGER SIZES FOR RECTANGULAR DUCT | 4 | NTS

COMBINATION FIRE/SMOKE DAMPER

OPENING TO BE SINGLE HEADER FRAMING FOR WOOD OR STEEL. WOOD FRAMED OPENINGS MUST BE LINED WITH MINIMUM 5/8" TYPE X GYP. BOARD. LINING NOT REQUIRED AT STEEL STUD, CONCRETE, OR MASONRY. SUGGESTED CLEARANCE BETWEEN SLEEVE AND OPENING 1/8" FOR EACH 12" DAMPER WIDTH AND HEIGHT FOR EXPANSION.
DAMPER TO BE HELD IN PLACE BY RETAINING ANGLES ATTACHED TO SLEEVE ON BOTH SIDES OF PARTITION, AND AROUND ENTIRE PERIMETER OF THE SLEEVE. ANGLES TO BE MIN. 16 GA. 1–1/2" X 1–1/2" OR LARGER AS REQUIRED TO PROVIDE A MIN. 1" OVERLAP OF THE OPENING. ANGLES MAY BE MITERED, BUTTED OR OVERLAPPED AT THE CORNERS. ATTACH ANGLES TO THE SLEEVE (NOT THE PARTITION) WITH SHEET METAL SCREWS, BOLTS OR WELDS AS PER MANUFACTURERS INSTRUCTIONS.
CONNECT DUCT TO SLEEVE WITH "S" TYPE SLIP CONNECTIONS.
DO NOT USE MECHANICAL FASTENERS.

FIRE/SMOKE DAMPER SPECIFICATIONS:

ALL FIRESMOKE DAMPERS SHALL BE LABELED AND LISTED BY CALIFORNIA STATE FIRE MARSHAL AND/OR UNDERWRITERS LABORATORIES. ALL DAMPERS MUST ALSO BE LEAKAGE RATED AND LABELED UNDER UNDERWRITER LABORATORIES STD. 555S. WITH SILICON SEALS ALLOWING NO MORE THAN 10 CFM/SQ.FT. AT 1" W.G. TO 350° F FOR A FULL 30 MIN. MOTOR OPERATED. TORQUE REQ'D. TO MAINTAIN LEAKAGE RATE NOT TO EXCEED 0 LBS. TORQUE. DAMPERS SHALL BE INSTALLED PER MANUFACTURERS INSTALLATION INSTRUCTIONS AND/OR STATE FIRE MARSHAL LISTING NO. 03225. POTTORFF COMPANY, INC. (LISTING # 03225:0368:110 AND 03230:0368:111) PROVIDE NON STALL SOLENOID MOTOR , 64 VA. MAXIMUM. TESTED FOR 1 YEAR CONTINUOUS POWER APPLICATIONS SUCH AS BELIMO CAPABLE TO REOPEN DAMPER REGARDLESS OF POWER FAILURE LENGTH OF TIME. PROVIDE 5 YEAR DAMPER AND ACTUATOR WARRANTY.

NOTE

ACCESS POINTS SHALL BE PERMANENTLY IDENTIFIED ON THE EXTERIOR BY A LABEL WITH LETTERS NOT LESS THAN 1/2" INCH IN HEIGHT READING: "SMOKE DAMPER, FIRE DAMPER OR SMOKE/FIRE DAMPER."

Ratings

UL 555 Fire Resistance Rating: 1-1/2 Hour (vertical and horizontal)
UL 555S Leakage Class: 2 [20 cfm/sq.ft. @ 4 in.wg.] [0.10 m³/s/m² @ 1.0 kPa]]
UL HNLJV-5: Ventilation Duct Assemblies
Maximum Dynamic Closure Velocity: 2,000 fpm (10.2 m/s)
Maximum UL555S Rated Pressure: 4 in.wg. (1.0 kPa)
Maximum Temperature: 350°F (177°C)

Listings

UL 555 and 555S: R11767
CAN/ULC S111Z and CAN/ULC S112.1 listing: R11767
CSFM listing: 3225-0368:110 and 3230-0368: 111
New York City MEA listing: 285-98-E
Meets NFPA Standards: 90A, 92A, 92B and 101
Meets Building Code Standards: IBC, NBC, NFPA, SBC and UBC

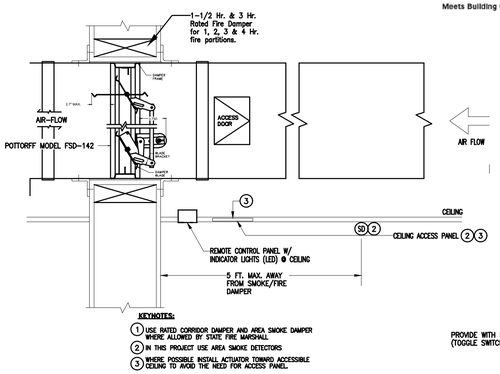

NOTE: AUTOMATIC ACTIVATION OF ANY COMBINATION SMOKE–FIRE DAMPERS SHALL SHUTDOWN FC–11

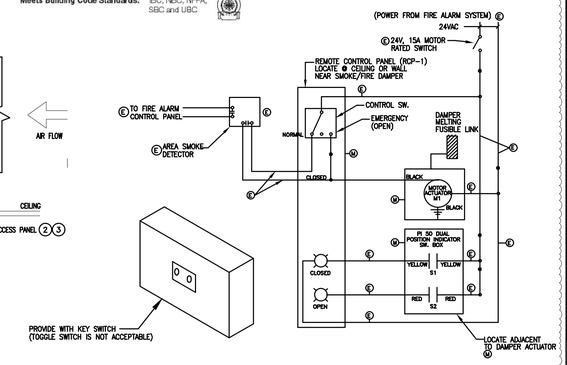

REMOTE CONTROL PANEL
(RCP–1)

COMBINATION SMOKE/FIRE DAMPER DETAIL (IF REQUIRED) | 2 | NTS

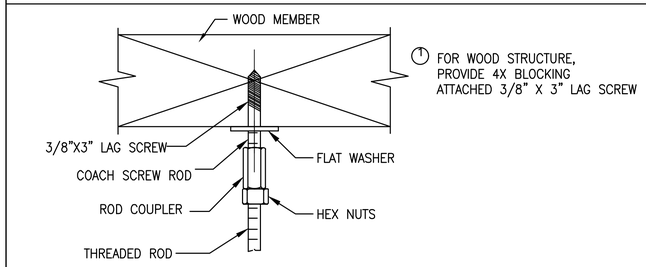

ANCHORAGE IN WOOD

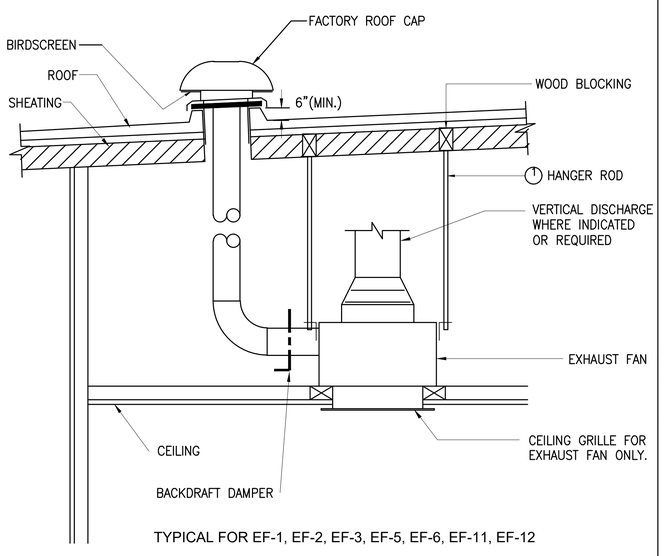

TYPICAL FOR EF-1, EF-2, EF-3, EF-5, EF-6, EF-11, EF-12

CEILING MOUNTED EXHAUST FAN DETAIL | 5 | NTS

BUILDING AND SAFETY DIVISION
Department of Public Works
FINAL ENERGY APPROVED
UNDER CGR TITLE 24, PART 1, ARTICLE 1 & PART 6
JMoon
PUBLIC WORKS
04/20/2026 10:58:05 AM
This set of plans and specifications must be kept at the job site at all times, and it is unlawful to make any changes, modifications or alterations to these plans or specifications without the prior written permission of the Building Official. The stamping of this set of plans and specifications SHALL NOT, under any circumstances, be deemed to permit or to be an approval of any work or activity that violates any provisions of any County Ordinance or State Law.

BUILDING AND SAFETY DIVISION
Department of Public Works
APPROVED
UNDER LOS ANGELES COUNTY CODE TITLE 29
JMoon
PUBLIC WORKS
04/20/2026 10:56:01 AM
This set of plans and specifications must be kept at the job site at all times, and it is unlawful to make any changes, modifications or alterations to these plans or specifications without the prior written permission of the Building Official. The stamping of this set of plans and specifications SHALL NOT, under any circumstances, be deemed to permit or to be an approval of any work or activity that violates any provisions of any County Ordinance or State Law.

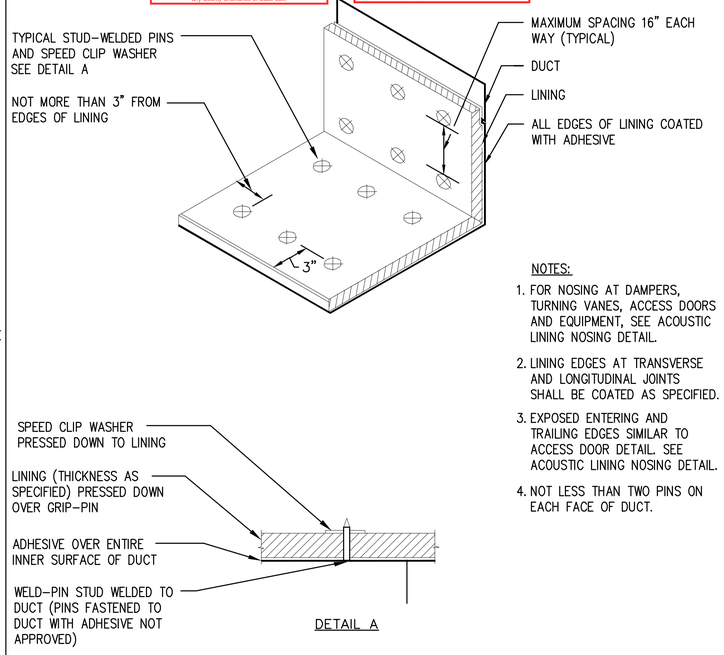

DETAIL A

NOTES:
1. FOR NOSING AT DAMPERS, TURNING VANES, ACCESS DOORS AND EQUIPMENT, SEE ACOUSTIC LINING NOSING DETAIL.
2. LINING EDGES AT TRANSVERSE AND LONGITUDINAL JOINTS SHALL BE COATED AS SPECIFIED.
3. EXPOSED ENTERING AND TRAILING EDGES SIMILAR TO ACCESS DOOR DETAIL. SEE ACOUSTIC LINING NOSING DETAIL.
4. NOT LESS THAN TWO PINS ON EACH FACE OF DUCT.

ACOUSTIC LINING INSTALLATION DETAIL | 3 | NTS

MARK	MAKE	MODEL	SIZE
GEF–1	PLYMOVENT	TEV	585–60

ISOLATORS ARE O.S.H.P.D. PRE-APPROVED No. OPA-0098
VIBREX TYPE: RMU-BQ-SH

MARK	SPRING O.D.	DEFL.
1–4	2.0"	1"

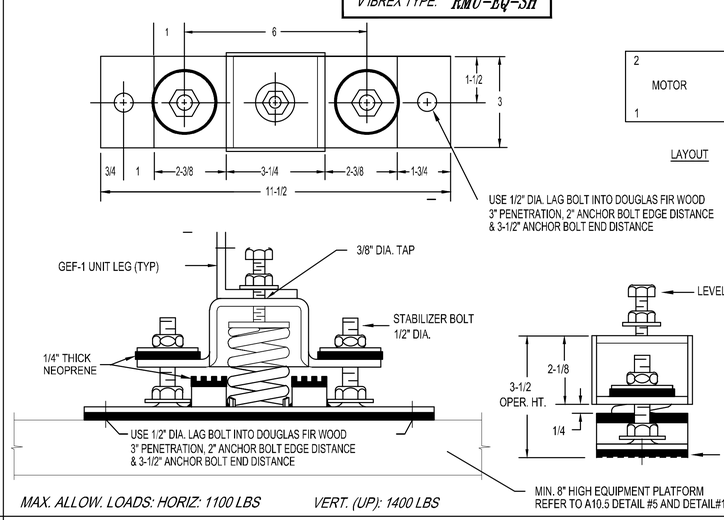

MAX. ALLOW. LOADS: HORIZ: 1100 LBS VERT. (UP): 1400 LBS

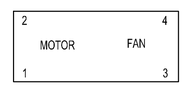

LAYOUT

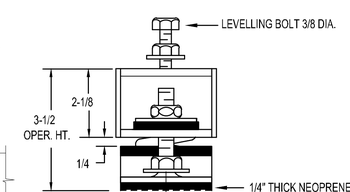

GEF-1 INSTALLATION DETAILS | 1 | NTS

WILLIAM LOYD JONES ARCHITECT
9415 culver boulevard
culver city, california
9 0 2 3 2
TEL 310 392 3995

ADDENDUM# 3 - BID SET - APRIL 30, 2026

KHALIFEH & ASSOCIATES
CONSULTING ENGINEERS
1625 W. OLYMPIC BLVD. #791, LOS ANGELES, CA 90015
Tel: (310) 305-1555 Fax: (310) 305-1550
www.KhalifehAssociates.com
252671
REGISTERED PROFESSIONAL ENGINEER JACK Y. KHALIFEH No. M025454 Exp. SEPT. 2026 STATE OF CALIFORNIA

MECHANICAL DETAILS

FIRE STATION 46
COUNTY OF LOS ANGELES FIRE DEPARTMENT
26720 BOMBERO LANE
VALENCIA, CALIFORNIA

FIVEPOINT Los Angeles

Issue	
LACoFD APPROVED	11.MAR.25
100% DD SET	17.APR.25
FIRE DEPARTMENT SUBMITTAL SET	20.MAY.25
PLAN CHECK SUBMITTAL SET	13.AUG.25
PLAN CHECK RESUBMITTAL SET	07.NOV.25
PLAN CHECK RESUBMITTAL SET	17.DEC.25
1 ADDED COMBINE SFD	05.MAR.26

THE ABOVE DRAWINGS AND SPECIFICATIONS AND SERVICE DESIGNS AND INFORMATION ARE THE PROPERTY OF THE ARCHITECT AND ARE THE PROPERTY OF THE ARCHITECT, AND NO PART THEREOF SHALL BE COPIED, DISCLOSED TO OTHERS OR USED IN CONNECTION WITH ANY WORK OR PROJECT OTHER THAN THE SPECIFIED PROJECT FOR WHICH THEY HAVE BEEN PREPARED AND DEVELOPED WITHOUT THE WRITTEN CONSENT OF THE ARCHITECT. ANY CONTACT WITH THESE DRAWINGS OR SPECIFICATIONS SHALL CONSTITUTE CONCLUSIVE EVIDENCE OF ACCEPTANCE OF THESE RESTRICTIONS.

WRITTEN DIMENSIONS ON THESE DRAWINGS SHALL HAVE PRECEDENCE OVER SCALED DIMENSIONS. CONTRACTORS SHALL VERIFY AND BE RESPONSIBLE FOR ALL DIMENSIONS AND CONDITIONS ON THE JOB AND THIS OFFICE MUST BE NOTIFIED OF ANY VARIATION AFFECTING THE STRUCTURE OR USE SHOWN ON THESE DRAWINGS. SHOP DETAILS MUST BE SUBMITTED TO THIS OFFICE FOR APPROVAL BEFORE PROCEEDING WITH FABRICATION.
Copyright 2005

Date	17.DEC.25
Drawn	BDL
Checked	JKK
Scale	NTS
Job. No.	

M4.5

Plot date : 2026-03-18

PER CHAPTER 7 SECTION 701.6.2 OF 2019 CALIFORNIA MECHANICAL CODE

COMBUSTION AIR CALCULATION

CONDITION:

APPLIANCE IN LAUNDRY ROOM ALL AIR FROM OUTDOORS

SIZE OF OPENING:

PROVIDE ONE OPENING INTO ROOM ENCLOSURE EACH HAVING
1 SQ.IN. PER 3,000 BTU/HR INPUT FROM OUTDOORS (12" WITHIN CEILING FINISH)

GAS LOAD: 25,000 BTU/H TOTAL (2 DRYER)

$\frac{50{,}000 \text{ BTU/H}}{3{,}000 \text{ BTU/H}}$ = 16.6 SQ.IN.

10"X8" REGISTERS = 40 SQ.IN. (@ 50% FREE AREA = 40 SQ. IN OR .28 FT2)

COMBUSTION AIR LOUVER OPENING PROVIDED AND CEILING MOUNTED GRILLE
10"X10" DUCT WITH 10"X8" CEILIGN REGISTERS = 100 in2 = 0.7 FT2

OCCUPANCY CATEGORY: LAUNDRY ROOMS, CENTRAL

LAUNDRY ROOM VENTILATION CALCULATION PER 2019 CMC 403.2.1 EQUATION 403.2.1
2019 CMC TABLE 402.1 AND ASHRAE 62.1

Vbz = Rp x Pz + Ra x Az
Vbz = 5x4 + .12x105
Vbz = 20 + 12.6
Vbz = 32.6 CFM REQUIRED VENTILATION (OSA AIR)
150 CFM provided

Ductwork

Wall Cap Type	No. of 90° Elbows	Maximum length of 4-inch diameter rigid metal duct
Recommended	0	65 ft. (19.8 m)
	1	55 ft. (16.8 m)
	2	47 ft. (14.3 m)
	3	36 ft. (11.0 m)
	4	28 ft. (8.5 m)

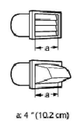

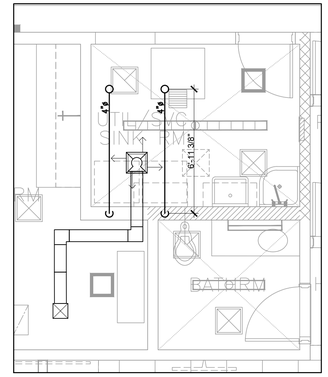

DRYER EXHAUST DUCT CALCULATION
(WORST CASE)

LINEAR DUCT LENGTH	=	7'-0"
DUCT RISER	=	7'-0"
TOTAL DUCT LENGTH	=	14'-0"
90° TURNS	=	2
45° TURNS	=	0

THE TOTAL DUCT LENGTH = 14'-0" WITH (2) ELBOWS IS WITHIN TYPICAL MANUFACTURER DUCT LENGTH COMMENDATIION

LG DRYER MODEL DLG3401W (STACKABLE DRYER)

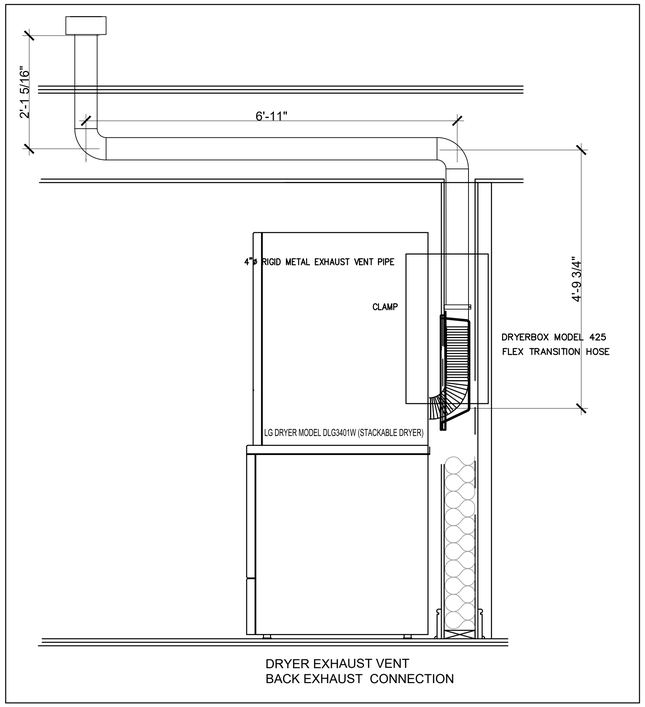

DRYER EXHAUST VENT
BACK EXHAUST CONNECTION

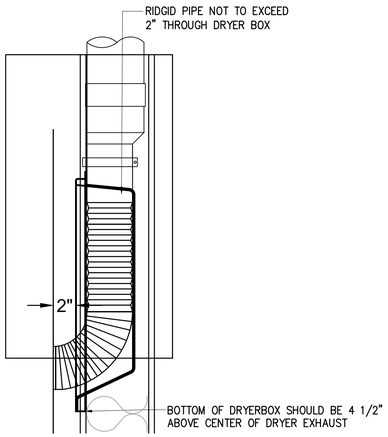

DRYERBOX DETAIL

DRYER EXHAUST VENT CONNECTION DETAIL WITH DRYER BOX | 2 | NTS

Figure 13.2 - Adapter Box Exploded Assembly

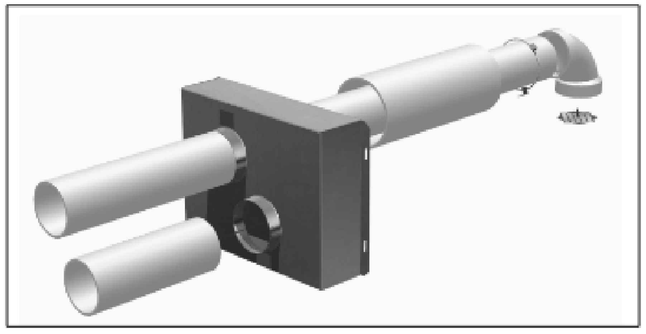

Figure 13.3 - Horizontal Concentric Vent Kit

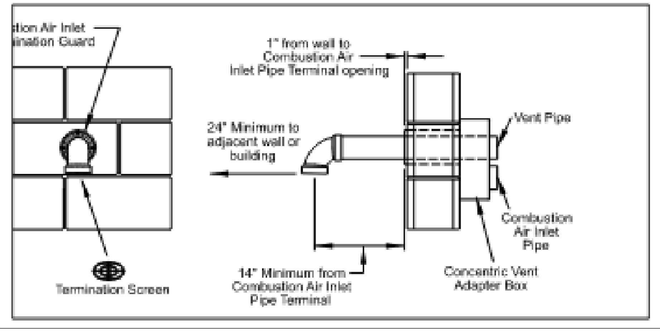

Figure 14.1 - Adapter Box with Combustion Air Intake Pipe Attached

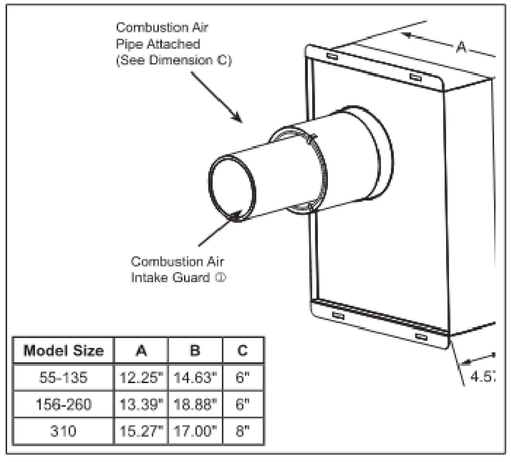

Model Size	A	B	C
55-135	12.25"	14.63"	6"
156-260	13.39"	18.88"	6"
310	15.27"	17.00"	8"

For Horizontally Vented Units (Refer to Figure 13.3):

① Concentric Adapter Assembly
② Vent Pipe Terminal Screen
③ Special Inlet Air Guard

D3. Once the kit contents have been verified as correct for the direction of venting, the concentric vent adapter box is to be installed. Determine the location of the box. Be sure to maintain all dimensions as listed in these instructions.

D4. The adapter box is to be mounted on the interior side of the building. It must not be mounted outside the building.

D5. The adapter box can be mounted flush to the wall (for horizontal kits) or to the ceiling (for vertical kits). When mounting the box, consider serviceability and access to the vent and combustion air pipes.

D6. Determine the length of the combustion air pipe that must be attached to the combustion air inlet (on the concentric side) of the adapter box to extend through the building wall or roof. Be sure to add the length of the thickness of the wall or roof. Refer to Figures 13.1 or 13.2 to determine the required minimum distance to the termination from the roof or wall.

D7. Cut the concentric side combustion air pipe to the proper length as determined in the previous step. Refer to Table 6.1 for pipe diameters and material.

D8. Attach the concentric side combustion air pipe to the air inlet of the concentric adapter box, as shown in Figure 14.1, using at least 3 corrosion-resistant sheet metal screws. Seal the joint using caulk.

D9. Place this assembly (the adapter box and combustion air pipe) through the wall or roof and verify that the distance requirements as defined in Step D6 are met. Securely attach the assembly to the building using the brackets on the adapter box.

D10. From outside the building, caulk the gap between the combustion air intake pipe and the building penetration.

D11. Install the vent pipe by extending the vent pipe all the way through the concentric vent adapter assembly. Seal the adapter around the pipe using caulk.

D12. Attach the combustion air intake and vent pipe terminations as follows:

For Horizontal Concentric Vent Kits (refer to Figure 13.3):

- Attach the combustion air intake guard using corrosion resistant screws at the end of the combustion air intake pipe to prevent animals and debris from entering (see Figure 14.1).
- Solvent weld (glue) the vent termination (elbow or tee) to the vent pipe.
- Install the vent screen(s) in the elbow or tee.

D13. Install the vent and combustion air pipe between unit heater and concentric vent adapter box as outlined in "Section A – General Instructions – All Units".

D14. Once venting is complete, proceed to the following section titled "Condensate Drain and Trap Installation".

BUILDING AND SAFETY DIVISION
Department of Public Works
FINAL ENERGY APPROVED
UNDER CGR TITLE 24, PART 1, ARTICLE 1 & PART 6
JMoon
PUBLIC WORKS
04/20/2026 10:58:05 AM
This set of plans and specifications must be kept at the job site at all times, and it is unlawful to make any changes, modifications or alterations to these plans or specifications without the prior written permission of the Building Official. The stamping of this set of plans and specifications SHALL NOT, under any circumstances, be deemed to permit or to be an approval of any work or activity that violates any provisions of any County Ordinance or State Law

BUILDING AND SAFETY DIVISION
Department of Public Works
APPROVED
UNDER LOS ANGELES COUNTY CODE TITLE 29
JMoon
PUBLIC WORKS
04/20/2026 10:56:01 AM
This set of plans and specifications must be kept at the job site at all times, and it is unlawful to make any changes, modifications or alterations to these plans or specifications without the prior written permission of the Building Official. The stamping of this set of plans and specifications SHALL NOT, under any circumstances, be deemed to permit or to be an approval of any work or activity that violates any provisions of any County Ordinance or State Law

GAS FIRED WATER HEATER CONCENTRIC VENT KIT HORIZONTAL TERMINATION DETAIL | 1 | NTS

WILLIAM LOYD JONES
ARCHITECT
9415 culver boulevard
culver city, california
9 0 2 3 2
TEL 310 392 3995

ADDENDUM# 3 - BID SET - APRIL 30, 2026

KHALIFEH & ASSOCIATES
CONSULTING ENGINEERS
1625 W. OLYMPIC BLVD, #791, LOS ANGELES, CA 90
Tel: (310) 305-1555 Fax: (310) 305-1550
www.KhalifehAssociates.com
252671
REGISTERED PROFESSIONAL ENGINEER
JACK Y. KHALIFEH
No. M025454
Exp. SEPT. 2026
STATE OF CALIFORNIA

MECHANICAL DETAILS

FIRE STATION 46
COUNTY OF LOS ANGELES FIRE DEPARTMENT
26720 BOMBERO LANE
VALENCIA, CALIFORNIA

FIVEPOINT Los Angeles

Issue	
LACoFD APPROVED	11.MAR.25
100% DD SET	17.APR.2
FIRE DEPARTMENT SUBMITTAL SET	20.MAY.25
PLAN CHECK SUBMITTAL SET	13.AUG.2
PLAN CHECK RESUBMITTAL SET	07.NOV.25
PLAN CHECK RESUBMITTAL SET	17.DEC.25

THE ABOVE DRAWINGS AND SPECIFICATIONS AND IDEAS, DESIGNS AND ARRANGEMENTS REPRESENTED THEREIN ARE AND SHALL REMAIN THE PROPERTY OF THE ARCHITECT, AND NO PART THEREOF SHALL BE COPIED, DISCLOSED TO OTHERS OR USED IN CONNECTION WITH ANY WORK OR PROJECT OTHER THAN THE SPECIFIED PROJECT FOR WHICH THEY HAVE BEEN PREPARED AND DEVELOPED WITHOUT THE WRITTEN CONSENT OF THE ARCHITECT. ANY CONTACT WITH THESE DRAWINGS OR SPECIFICATIONS SHALL CONSTITUTE CONCLUSIVE EVIDENCE OF ACCEPTANCE OF THESE RESTRICTIONS.

WRITTEN DIMENSIONS ON THESE DRAWINGS SHALL HAVE PRECEDENCE OVER SCALED DIMENSIONS. ALL DIMENSIONS SHALL BE VERIFIED ON THE JOB SITE AND THE ARCHITECT MUST BE NOTIFIED OF ANY VARIATIONS FROM THE DIMENSIONS AND CONDITIONS SHOWN BY THESE DRAWINGS. SHOP DETAILS MUST BE SUBMITTED TO THIS OFFICE FOR APPROVAL BEFORE PROCEEDING WITH FABRICATION.

Copyright 2005

Date	17.DEC.25
Drawn	BD
Checked	JK
Scale	NTS
Job. No.	

M4.6

Plot date : 2026-03-18

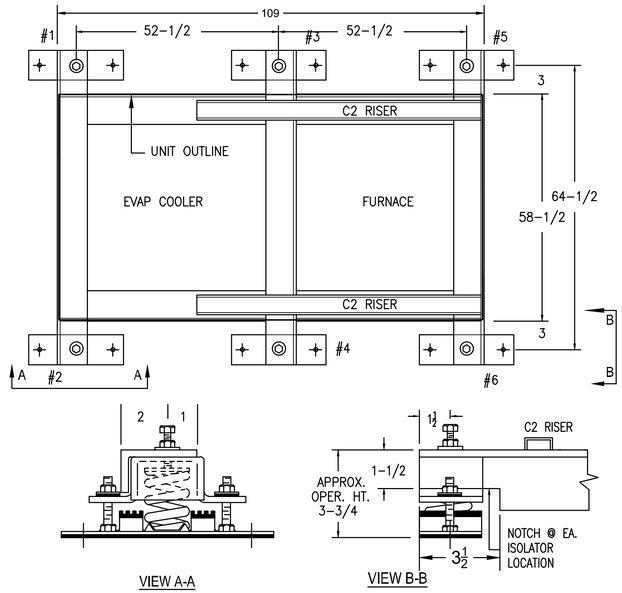

NOTES: 1. APPROX. STEEL WEIGHT INCLUDING ISOLATORS.: 200 LBS.
2. ISOLATORS ARE OSHPD PRE-APPROVED #OPA-0098. SEE DETAIL #1 THIS SHEET.
3. ADEQUACY OF UNIT LEG WHEN ANCHORED AS INDICATED ON PLAN SHALL BE THE RESPONSIBILTY OF THE UNIT MANUFACTURER.

MAKE	TYPE	SIZE	STEEL SIZE
MUA-1	STERLING	PV40	L3 X 3 X 1/4

BASE RAIL W/ VIBRATION ISOLATORS AND SEISMIC RESTRAINT DETAIL FOR MUA-1 | 2 | NTS

NOTES: 1) ALL DIMENSIONS IN INCHES
2) SPRING DEFLECTION = 2"
3) USE 1/2" DIA. LAGBOLT INTO DOUGLAS FIR WOOD, 3" PENETRATION, 2" EDGE DISTANCE & 3-1/2" END DISTANCE.

	OD	DEFL	
	2\	2	

ISOLATORS ARE O.S.H.P.D.
PRE-APPROVED No. OPA-0098
VIBREX TYPE: RMUA-BQ-SH-1

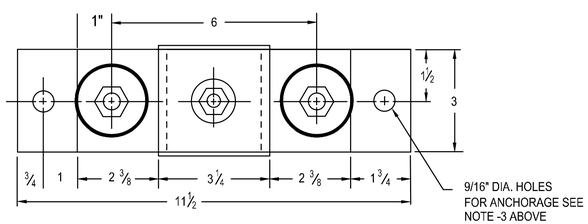

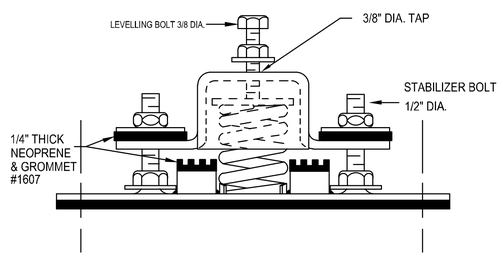

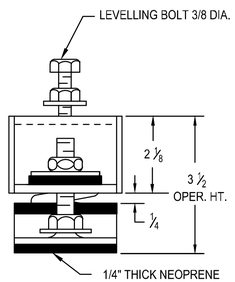

MAX. ALLOW. LOADS: *HORIZ.* 1100 lbs. *VERT. (UP)* 1400 lbs.

TYPICAL SPRING VIBRATION ISOLATORS DETAILS (MUA-1) | 1 | NTS

BUILDING AND SAFETY DIVISION
Department of Public Works
FINAL ENERGY APPROVED
UNDER CGR TITLE 24, PART 1, ARTICLE 1 & PART 6
JMoon
PUBLIC WORKS
04/20/2026 10:58:06 AM
This set of plans and specifications must be kept at the job site at all times, and it is unlawful to make any changes, modifications or alterations to these plans or specifications without the prior written permission of the Building Official. The stamping of this set of plans and specifications SHALL NOT, under any circumstances, be deemed to permit or to be an approval of any work or activity that violates any provisions of any County Ordinance or State Law

BUILDING AND SAFETY DIVISION
Department of Public Works
APPROVED
UNDER LOS ANGELES COUNTY CODE TITLE 29
JMoon
PUBLIC WORKS
04/20/2026 10:56:01 AM
This set of plans and specifications must be kept at the job site at all times, and it is unlawful to make any changes, modifications or alterations to these plans or specifications without the prior written permission of the Building Official. The stamping of this set of plans and specifications SHALL NOT, under any circumstances, be deemed to permit or to be an approval of any work or activity that violates any provisions of any County Ordinance or State Law

WILLIAM LOYD JONES ARCHITECT
9415 culver boulevard
culver city, california
9 0 2 3 2
TEL 310 392 3995

ADDENDUM# 3 - BID SET - APRIL 30, 2026

KHALIFEH & ASSOCIATES
CONSULTING ENGINEERS
1625 W. OLYMPIC BLVD. #791, LOS ANGELES, CA 90
Tel: (310) 305-1555 Fax: (310) 305-1550
www.KhalifehAssociates.com
252671
REGISTERED PROFESSIONAL ENGINEER JACK T. KHALIFEH No. M025454 Exp. SEPT. 2026 STATE OF CALIFORNIA

MECHANICAL DETAILS

FIRE STATION 46
COUNTY OF LOS ANGELES FIRE DEPARTMENT
26720 BOMBERO LANE
VALENCIA, CALIFORNIA

FIVEPOINT Project

Issue	
LACoFD APPROVED	11.MAR.25
100% DD SET	17.APR.25
FIRE DEPARTMENT SUBMITTAL SET	20.MAY.25
PLAN CHECK SUBMITTAL SET	13.AUG.25
PLAN CHECK RESUBMITTAL SET	07.NOV.25
PLAN CHECK RESUBMITTAL SET	17.DEC.25

THE ABOVE DRAWINGS AND SPECIFICATIONS AND IDEAS, DESIGNS AND ARRANGEMENTS REPRESENTED THEREBY ARE AND SHALL REMAIN THE PROPERTY OF THE ARCHITECT AND NO PART THEREOF SHALL BE COPIED, DISCLOSED TO OTHERS OR USED IN CONNECTION WITH ANY WORK OTHER THAN THE SPECIFIC PROJECT FOR WHICH THEY HAVE BEEN PREPARED AND DEVELOPED WITHOUT THE WRITTEN CONSENT OF THE ARCHITECT. VISUAL CONTACT WITH THESE DRAWINGS AND SPECIFICATIONS SHALL CONSTITUTE CONCLUSIVE EVIDENCE OF ACCEPTANCE OF THESE RESTRICTIONS.

WRITTEN DIMENSIONS ON THESE DRAWINGS SHALL HAVE PRECEDENCE OVER SCALED DIMENSIONS. CONTRACTORS SHALL VERIFY AND BE RESPONSIBLE FOR ALL DIMENSIONS AND CONDITIONS ON THE JOB AND THIS OFFICE MUST BE NOTIFIED OF ANY VARIATIONS FROM THE DIMENSIONS AND CONDITIONS SHOWN BY THESE DRAWINGS. SHOP DETAILS MUST BE SUBMITTED TO THIS OFFICE FOR APPROVAL BEFORE PROCEEDING WITH FABRICATION.

Copyright 2005

Date	17.DEC.25
Drawn	BDL
Checked	JKT
Scale	NTS
Job. No.	

M4.7

Plot date : 2026-03-18

MARK	MAKE	MODEL	STEEL SIZE
OU-1	MITSUBISHI	PURY-EP120	L4 X 3 X 1/4
OU-2	MITSUBISHI	PURY-EP120	

DETAIL-1

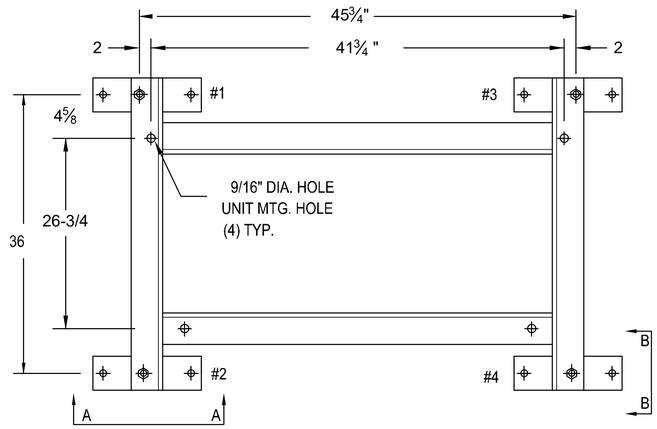

NOTES:
1. APPROXIMATE STEEL WEIGHT & ISOLATORS = 250 LBS
2. FOR ISOLATOR DETAILS, SEE DWG-1.1.
3. M.W. SAUSSE & CO. INC. IS NOT RESPONSIBLE FOR THE STRUCTURAL INTEGRITY OF THE EQUIPMENT WHEN ANCHORED AS SHOWN.
4. ALL DIMENSIONS TO BE FIELD VERIFIED BY CONTRACTOR BEFORE CONSTRUCTION.

DETAIL-2

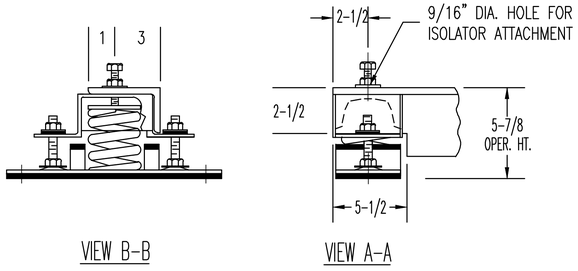

DETAIL-3

MTG	SPRING O.D.	DEFL
1-4	4"	2"

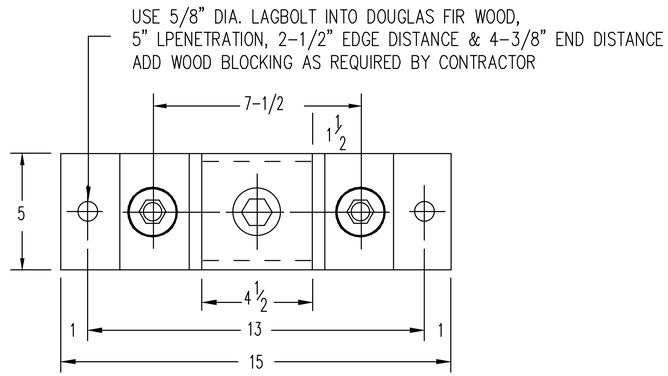

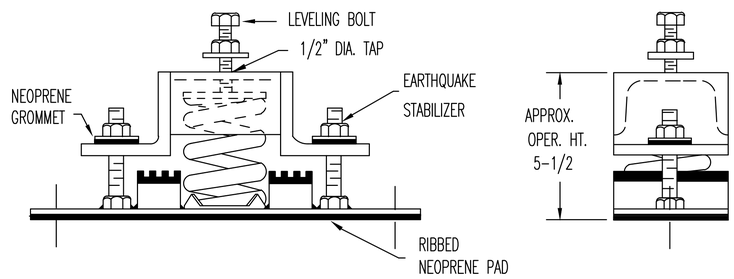

MAX. ALLOW. LOADS: HORIZ: 2200 LBS *VERT. (UP): 2820 LBS*

M. W. SAUSSE & CO., INC.
28744 Whitherspoon Pkwy. Valencia, CA 91355
Phone: (661) 257-3311 Fax: (661) 257-7673

Vibrex vibration & seismic control systems

RMUAB

JOB NAME: FIRE STATION 46	*REVISIONS:*	*DRN:* TDT	
CUST.:	*A:*	*DATE:* 5-6-25	
CUST. P.O.:	*B:*	*DRAWING NO.:* -1	
MECH. ENGR .: KHALIFEH	*C:*		
MARK: OU-1,2	*D:*		

BUILDING AND SAFETY DIVISION
Department of Public Works
FINAL ENERGY APPROVED
UNDER CGR TITLE 24, PART 1, ARTICLE 1 & PART 6
JMoon
PUBLIC WORKS
04/20/2026 10:58:06 AM
This set of plans and specifications must be kept at the job site at all times, and it is unlawful to make any changes, modifications or additions to these plans or specifications without the prior written permission of the Building Official. The stamping of this set of plans and specifications SHALL NOT, under any circumstances, be deemed to permit or to be an approval of any work or activity that violates any provisions of any County Ordinance or State Law

BUILDING AND SAFETY DIVISION
Department of Public Works
APPROVED
UNDER LOS ANGELES COUNTY CODE
TITLE 29
JMoon
PUBLIC WORKS
04/20/2026 10:56:01 AM
This set of plans and specifications must be kept at the job site at all times, and it is unlawful to make any changes, modifications or additions to these plans or specifications without the prior written permission of the Building Official. The stamping of this set of plans and specifications SHALL NOT, under any circumstances, be deemed to permit or to be an approval of any work or activity that violates any provisions of any County Ordinance or State Law

BASE RAIL W/ VIBRATION ISOLATORS AND SEISMIC RESTRAINT DETAIL FOR OU-1 AND OU-2

1
NTS

WILLIAM LOYD JONES
ARCHITECT
9415 culver boulevard
culver city, california
9 0 2 3 2
TEL 310 392 3995

ADDENDUM# 3 - BID SET - APRIL 30, 2026

KHALIFEH & ASSOCIATES
CONSULTING ENGINEERS
1625 W. OLYMPIC BLVD. #791, LOS ANGELES, CA 90
Tel: (310) 305-1555 Fax: (310) 305-1550
www.KhalifehAssociates.com
252671

REGISTERED PROFESSIONAL ENGINEER JACK T. KHALIFEH No. M025454 Exp. SEPT. 2026 STATE OF CALIFORNIA

MECHANICAL DETAILS

FIRE STATION 46
COUNTY OF LOS ANGELES FIRE DEPARTMENT
26720 BOMBERO LANE
VALENCIA, CALIFORNIA

FIVEPOINT Los Angeles

Issue	
LACoFD APPROVED	11.MAR.25
100% DD SET	17.APR.25
FIRE DEPARTMENT SUBMITTAL SET	20.MAY.25
PLAN CHECK SUBMITTAL SET	13.AUG.25
PLAN CHECK RESUBMITTAL SET	07.NOV.25
PLAN CHECK RESUBMITTAL SET	17.DEC.25

THE ABOVE DRAWINGS AND SPECIFICATIONS AND SHALL DESIGNS AND ARRANGEMENTS REPRESENTED THEREBY ARE AND SHALL REMAIN THE PROPERTY OF THE ARCHITECT, AND NO PART THEREOF SHALL BE COPIED, DISCLOSED TO OTHERS OR USED IN CONNECTION WITH ANY WORK OR PROJECT OTHER THAN THE SPECIFIC PROJECT FOR WHICH THEY HAVE BEEN PREPARED AND DEVELOPED WITHOUT THE WRITTEN CONSENT OF THE ARCHITECT. ANY CONTRACT WITH THESE DRAWINGS OR SPECIFICATIONS SHALL CONSTITUTE CONCLUSIVE EVIDENCE OF ACCEPTANCE OF THESE RESTRICTIONS.

WRITTEN DIMENSIONS ON THESE DRAWINGS SHALL HAVE PRECEDENCE OVER SCALED DIMENSIONS. CONTRACTORS SHALL VERIFY AND BE RESPONSIBLE FOR ALL DIMENSIONS. CONTRACTORS SHALL REPORT ALL ERRORS AND OMISSIONS TO BE NOTIFIED OF ANY VARIATIONS FROM THE DIMENSIONS AND CONDITIONS SHOWN BY THESE DRAWINGS. SHOP DETAILS MUST BE SUBMITTED TO THIS OFFICE FOR APPROVAL BEFORE PROCEEDING WITH FABRICATION.

Copyright 2005

Date	17.DEC.25
Drawn	BDL
Checked	JK
Scale	NTS
Job. No.	

M4.8

Plot date : 2026-03-18

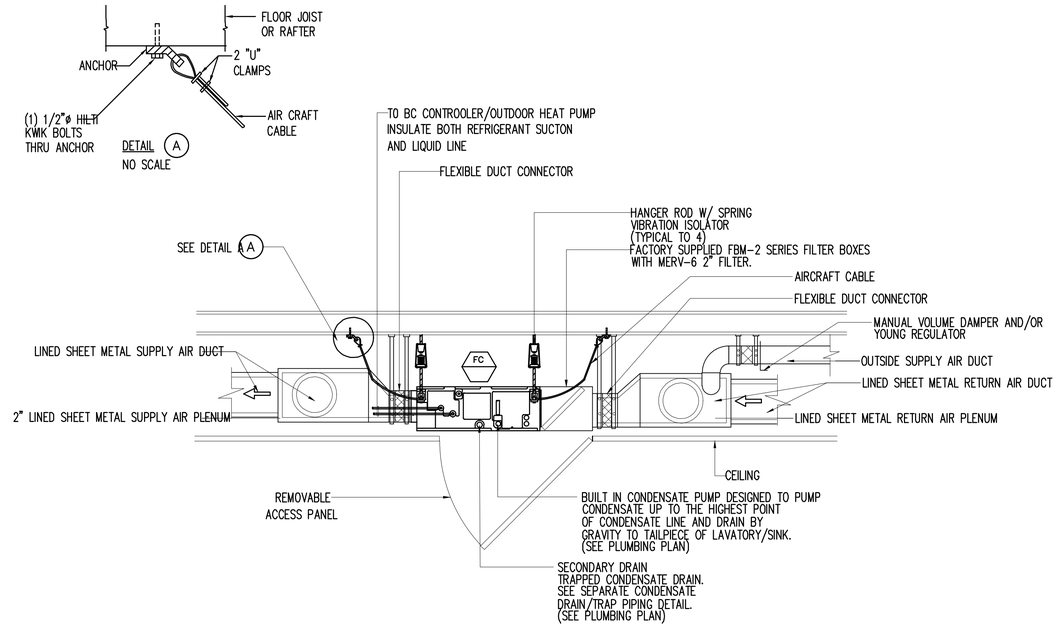

MITSUBISHI HORIZONTAL FAN COIL UNIT INSTALLATION DETAIL(PEFY SERIES) 2 NTS

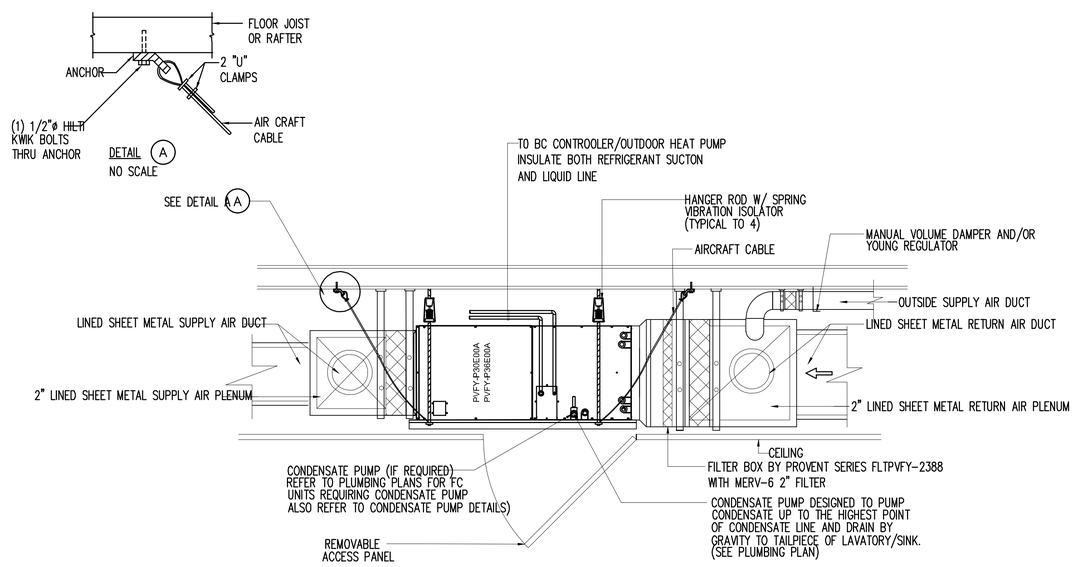

MITSUBISHI HORIZONTAL FAN COIL UNIT INSTALLATION DETAIL(PVFY SERIES) 1 NTS

BUILDING AND SAFETY DIVISION
Department of Public Works
FINAL ENERGY APPROVED
UNDER CGR TITLE 24, PART 1, ARTICLE 1 & PART 6
JMoon
PUBLIC WORKS
04/20/2026 10:58:06 AM
This set of plans and specifications must be kept at the job site at all times, and it is unlawful to make any changes, modifications or alterations to these plans or specifications without the prior written permission of the Building Official. The stamping of this set of plans and specifications SHALL NOT, under any circumstances, be deemed to permit or to be an approval of any work or activity that violates any provisions of any County Ordinance or State Law

BUILDING AND SAFETY DIVISION
Department of Public Works
APPROVED
UNDER LOS ANGELES COUNTY CODE
TITLE 29
JMoon
PUBLIC WORKS
04/20/2026 10:56:01 AM
This set of plans and specifications must be kept at the job site at all times, and it is unlawful to make any changes, modifications or alterations to these plans or specifications without the prior written permission of the Building Official. The stamping of this set of plans and specifications SHALL NOT, under any circumstances, be deemed to permit or to be an approval of any work or activity that violates any provisions of any County Ordinance or State Law

WILLIAM LOYD JONES ARCHITECT
9415 culver boulevard
culver city, california
9 0 2 3 2
TEL 310 392 3995

ADDENDUM# 3 - BID SET - APRIL 30, 2026

KHALIFEH & ASSOCIATES
CONSULTING ENGINEERS
1625 W. OLYMPIC BLVD. #791, LOS ANGELES, CA 90
Tel: (310) 305-1555 Fax: (310) 305-1550
www.KhalifehAssociates.com
252671
REGISTERED PROFESSIONAL ENGINEER JACK Y. KHALIFEH No. M025454 Exp. SEPT. 2026 STATE OF CALIFORNIA

MECHANICAL DETAILS

FIRE STATION 46
COUNTY OF LOS ANGELES FIRE DEPARTMENT
26720 BOMBERO LANE
VALENCIA, CALIFORNIA

FIVEPOINT Project

Issue	
LACoFD APPROVED	11.MAR.25
100% DD SET	17.APR.25
FIRE DEPARTMENT SUBMITTAL SET	20.MAY.25
PLAN CHECK SUBMITTAL SET	13.AUG.25
PLAN CHECK RESUBMITTAL SET	07.NOV.25
PLAN CHECK RESUBMITTAL SET	17.DEC.25

THE ABOVE DRAWINGS AND SPECIFICATIONS AND IDEAS, DESIGNS AND ARRANGEMENTS REPRESENTED THEREBY ARE AND SHALL REMAIN THE PROPERTY OF THE ARCHITECT AND THE ARCHITECT HAS THE RIGHTS DISCLOSED TO OTHERS OR USED IN CONNECTION WITH ANY WORK OR PROJECT OTHER THAN THE SPECIFIC PROJECT FOR WHICH THEY HAVE BEEN PREPARED AND DEVELOPED WITHOUT THE WRITTEN CONSENT OF THE ARCHITECT. VISITS TO CONTRACT SITIN THESE DRAWINGS OR SPECIFICATIONS SHALL CONSTITUTE CONCLUSIVE EVIDENCE OF ACCEPTANCE OF THESE RESTRICTIONS.

WRITTEN DIMENSIONS ON THESE DRAWINGS SHALL HAVE PRECEDENCE OVER SCALED DIMENSIONS. CONTRACTORS SHALL CHECK AND VERIFY DIMENSIONS FOR ALL DIMENSIONS AND CONDITIONS ON THE JOB AND THIS OFFICE MUST BE NOTIFIED OF ANY VARIATIONS FROM THE DIMENSIONS AND CONDITIONS SHOWN ON THESE DRAWINGS AND SPECIFICATIONS SUBMITTED TO THIS OFFICE FOR APPROVAL BEFORE PROCEEDING WITH FABRICATION.

Copyright 2005

Date	17.DEC.25
Drawn	BDL
Checked	JK
Scale	NTS
Job. No.	

M4.9

Plot date : 2026-03-18

KHALIFEH & ASSOCIATES
CONSULTING ENGINEERS

MAXIMUM ALLOWABLE REFRIGERANT CHARGE

Fire Station 46

Compliance with ASHRAE 15-2024

R-32 REFRIGERANT

1625 W. Olympic Blvd. Suite 791, Los Angeles, CA 90015
Tel: 310-305-1555 • Fax: 310-305-1550
www.khalifehassociates.com

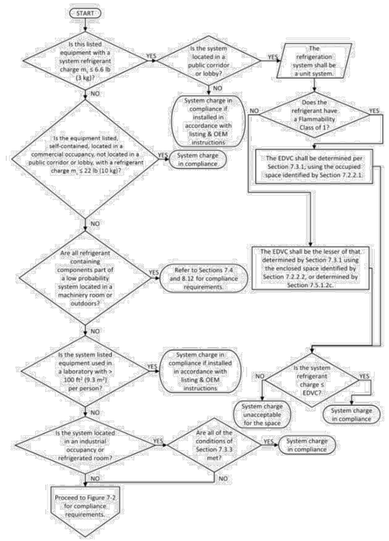

Figure 7-1 Refrigerant charge limit compliance path—Part 1.

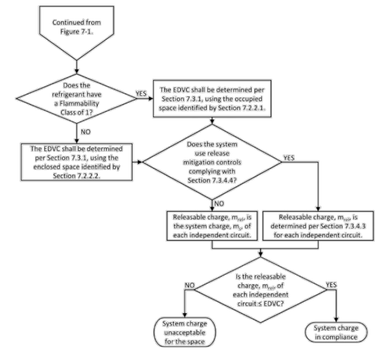

Figure 7-2 Refrigerant charge limit compliance path—Part 2.

OU-1/BC-1 AND OU-2/BC-2

Refrigerant charge (m_r's) of Mitsubishi PURY-EM120TXU-A (OU-1) = 47.16 lb.

Refrigerant charge (m_r's) of Mitsubishi PURY-EM120TXU-A (OU-2) = 48.0 lb.

EVDC calculation Per ASHRAE 15-2024, Section 7.3.1.1, Section 7.6 Equation 7-8

$$EDVC = Veff \times LFL \times CF \times Focc$$

Where:

EVDC = *effective dispersal volume charge, lb*

Veff = *effective dispersal volume, ft3*

LFL = *lower flammability limit, lb/ft3(for R-32 per ASHRAE 34-2024=0.0192lb/ft3)*

CF = *concentration factor, value of 0.5*

Focc = *occupancy adjustment factor(For all occupancies other than institutional occupancies, Focc has a value of 1.0. For institutional occupancies, Focc has a value of 0.5)*

Mrel calculation for Multiple Independent circuit Per ASHRAE 15-2024, Section 7.3.4.3, Equation 7-4a

$$Mrel = (tr1 \times 0.0062) + mr2 + mr3 \quad (tr1=30 \text{ seconds})$$

Where:

mr1 = *time before the leak is detected per section 7.6.2.4*

0.0062 = *leakage rate in lb/s*

mr2 = *leakage between the detection of the leak and the closing of the safety shutoff valve, lb*

mr3 = *leakage in the piping downstream of the safety shutoff valve after the valve is closed, lb*

$$mr2 = tclose \times 0.0062 \qquad (tclose=15 \text{ seconds}) \qquad \text{Equation 7-5a}$$

Where:

tclose = *time from when a leak is detected until the safety shutoff valve closes*

0.0062 = *leakage rate in lb/s*

$$Mr3 = \Sigma Vpipe \times pref \qquad \text{Equation 7-6}$$

Where:

Vpipe = *internal volume of each section of the piping downstream of the safety shutoff valve, ft3*

pref = *density of the refrigerant in each section of pipe downstream of the safety shutoff valve, lb/ft3*

Space Name	*Room volume (Veff)*	*LFL*	*CF*	*Focc*	*EVDC*	*Mrel (lb)*
DORM 1 (FC-9)	1440	0.0191	0.5	1	13.752	2.9
DORM 2 (FC-10)	1460	0.0191	0.5	1	13.943	2.9
DORM 3 (FC-1)	1450	0.0191	0.5	1	13.8475	2.9
DORM 4 (FC-2)	1460	0.0191	0.5	1	13.943	2.68
DORM 5 (FC-3)	1450	0.0191	0.5	1	13.8475	2.42
DORM 6 (FC-4)	1450	0.0191	0.5	1	13.8475	1.86
DORM 7 (FC-5)	1450	0.0191	0.5	1	13.8475	1.86
DORM 8 (FC-6)	1450	0.0191	0.5	1	13.8475	1.68
DORM 9 (FC-7)	1450	0.0191	0.5	1	13.8475	2.9
DORM 10 (FC-8)	1450	0.0191	0.5	1	13.8475	1.73
HALLWAY/PARAMEDICSUPPLY/JAN. STORAGE BATHROOM/ADA BATHRM. /TURNOUT STORAGE ROOM/PASSAGE (FC-11)	17262	0.0191	0.5	1	164.8521	7.86
EXERCISE ROOM (FC-12)	5520	0.0191	0.5	1	52.716	6.18
LOBBY (FC-13)	8560	0.0191	0.5	1	81.748	3.89
STATION OFFICE (FC-14)	8560	0.0191	0.5	1	81.748	3.58
CENTRAL STORAGE/WORK RM./UTIL/5VC SINK RM./COPY ROOM/BATH RM/PASSAGE (FC-15)	5976	0.0191	0.5	1	57.0708	4.91
DAY ROOM (FC-16)	15760	0.0191	0.5	1	150.508	7.32
KITCHEN/DINING (FC-17)	15760	0.0191	0.5	1	150.508	7.09
TELECOM ROOM (FC-TR)	711	0.0191	0.5	1	6.79005	3.36

MREL is less than the EVDC, and each independent circuit falls below the EVDC threshold. All fan coils are provided with factory-supplied integral mitigation controls, in accordance with ASHRAE 15-2024 Section 7.3.4.4. Since the smallest calculated space complies with the requirements, all other spaces are deemed compliant as well.
Therefore, the system complies with the refrigerant charge limits set forth in the ASHRAE 15-2024 Safety Standard for Refrigeration Systems.

BUILDING AND SAFETY DIVISION
Department of Public Works
FINAL ENERGY APPROVED
UNDER CGR TITLE 24, PART 1, ARTICLE 1.6 PART 6
JM.00M.
PUBLIC WORKS
04/20/2026 10:58:06 AM
This set of plans and specifications must be kept at the job site at all times, and it is unlawful to make any changes, modifications or alterations to these plans or specifications without the prior written permission of the Building Official. The stamping of this set of plans and specifications SHALL NOT, under any circumstances, be deemed to permit or to be an approval of any work or activity that violates any provisions of any County Ordinance or State Law

BUILDING AND SAFETY DIVISION
Department of Public Works
APPROVED
UNDER LOS ANGELES COUNTY CODE TITLE 29
JM.00M.
PUBLIC WORKS
04/20/2026 10:56:01 AM
This set of plans and specifications must be kept at the job site at all times, and it is unlawful to make any changes, modifications or alterations to these plans or specifications without the prior written permission of the Building Official. The stamping of this set of plans and specifications SHALL NOT, under any circumstances, be deemed to permit or to be an approval of any work or activity that violates any provisions of any County Ordinance or State Law

BASE RAIL W/ VIBRATION ISOLATORS AND SEISMIC RESTRAINT DETAIL FOR OU-1 AND OU-2

1
NTS

WILLIAM LOYD JONES
ARCHITECT
9415 culver boulevard
culver city, california
9 0 2 3 2
TEL 310 392 3995

ADDENDUM# 3 - BID SET - APRIL 30, 2026

KHALIFEH & ASSOCIATES
CONSULTING ENGINEERS
1625 W. OLYMPIC BLVD. #791, LOS ANGELES, CA 90015
Tel: (310) 305-1555 Fax: (310) 305-1550
www.KhalifehAssociates.com
252671

REGISTERED PROFESSIONAL ENGINEER
JACK T. KHALIFEH
No. M025454
Exp. SEPT. 2026
STATE OF CALIFORNIA

ASHRAE 15-2024
MAXIMUM REFRIGERANT EXPOSURE LIMIT CALCULATION (Mrel)

FIRE STATION 46
COUNTY OF LOS ANGELES FIRE DEPARTMENT
26720 BOMBERO LANE
VALENCIA, CALIFORNIA

FIVEPOINT Project

Issue	
LACoFD APPROVED	11.MAR.25
100% DD SET	17.APR.25
FIRE DEPARTMENT SUBMITTAL SET	20.MAY.25
PLAN CHECK SUBMITTAL SET	13.AUG.25
PLAN CHECK RESUBMITTAL SET	07.NOV.25
PLAN CHECK RESUBMITTAL SET	17.DEC.25

THE ABOVE DRAWINGS AND SPECIFICATIONS AND IDEAS, DESIGNS AND ARRANGEMENTS REPRESENTED THEREBY ARE AND SHALL REMAIN THE PROPERTY OF THE ARCHITECT, AND NO PART THEREOF SHALL BE COPIED, DISCLOSED TO OTHERS OR USED IN CONNECTION WITH ANY WORK OR PROJECT OTHER THAN THE SPECIFIED PROJECT FOR WHICH THEY HAVE BEEN PREPARED AND DEVELOPED WITHOUT THE WRITTEN CONSENT OF THE ARCHITECT. USE IN CONTACT WITH THESE DRAWINGS OR SPECIFICATIONS SHALL CONSTITUTE CONCLUSIVE EVIDENCE OF ACCEPTANCE OF THESE RESTRICTIONS.

WRITTEN DIMENSIONS ON THESE DRAWINGS SHALL HAVE PRECEDENCE OVER SCALED DIMENSIONS. CONTRACTORS SHALL VERIFY AND BE RESPONSIBLE FOR ALL DIMENSIONS AND CONDITIONS ON THE JOB AND THIS OFFICE MUST BE NOTIFIED OF ANY VARIATIONS FROM THE DIMENSIONS AND CONDITIONS SHOWN BY THESE DRAWINGS. SHOP DETAILS MUST BE SUBMITTED TO THIS OFFICE FOR APPROVAL BEFORE PROCEEDING WITH FABRICATION.
Copyright 2015

Date	17.DEC.25
Drawn	BDL
Checked	JK
Scale	NTS
Job. No.	

M4.10

Plot date : 2026-03-18

COPYRIGHT ASHRAE www.ashrae.org Licensed to BCA, ASHRAE LICENSE CONNECTION at 2025-05-28 07:21:07 +0000 (#1111000) # user=Kalfayan, Raffi Order #0000127 Downloaded by Kalfayan, Raffi ASHRAE www.ashrae.org

5.3.1* The owner or the owner's authorized agent *shall* be notified prior to making a change of *refrigerant*, and the change of *refrigerant shall not* be made where the owner objects to the change.

5.3.2 The change of *refrigerant shall* be in accordance with one of the following:

a. Written instructions of the original equipment *manufacturer*
b. An evaluation of the *refrigeration system* by a registered design professional or by a *nationally recognized testing laboratory* that validates safety and suitability of the replacement *refrigerant*
c. Approval of the authority having jurisdiction (AHJ)

5.3.3 Where the replacement *refrigerant* is classified into the same safety group, requirements that were applicable to the existing *refrigeration system shall* continue to apply.

5.3.4 Where the replacement *refrigerant* is classified into a different safety group, the *refrigeration system shall* comply with the requirements of this standard for a new installation, and the change of *refrigerant shall* require AHJ approval.

6. REFRIGERANT SAFETY CLASSIFICATION

6.1 *Refrigerants shall* be assigned safety classifications in accordance with ASHRAE Standard 34.[3]

6.2 *Refrigerants* with a *refrigerant* number designation in the referenced edition of ASHRAE Standard 34 [3] *shall* use the indicated toxicity classification and flammability classification when a safety group classification is assigned by ASHRAE Standard 34.

6.3 *Refrigerants* without a *refrigerant* number designation or without a safety group classification in the referenced edition of ASHRAE Standard 34 [3] *shall* be classified in accordance with the criteria in ASHRAE Standard 34, whether as a single-compound *refrigerant* or a *refrigerant blend* of two or more compounds. Such safety classifications not assigned by ASHRAE Standard 34 *shall* be submitted for approval to the authority having jurisdiction. Compliance with the requirements of this standard is contingent upon use of *approved* safety classifications when not assigned by the referenced edition of ASHRAE Standard 34.

7. RESTRICTIONS ON REFRIGERANT USE

7.1 General. The *occupancy*, *refrigeration system*, and *refrigerant* safety classifications cited in this section *shall* be determined in accordance with Sections 4, 5, and 6, respectively.

7.2* Volume Calculations

7.2.1 General. The *effective dispersal volume* identified in Section 7.3 into which *refrigerant* will disperse in the event of a release *shall* be calculated in accordance with this section. Volume calculations *shall* evaluate each space or *connected spaces* relevant to each *refrigeration system*. The smallest volume into which *refrigerant* disperses *shall* be used to determine the *refrigerant* quantity limit in the *refrigeration system*.

7.2.2 Refrigerant Groups

7.2.2.1 Flammability Class 1. For Group A1 and B1 *refrigerants*, the *effective dispersal volume shall* be based on the *occupied space* served by a *refrigeration system*. Outdoor spaces *shall not* be included.

7.2.2.2 Flammability Class 2L, 2, and 3. For Group A2L, A2, A3, B2L, B2, and B3 *refrigerants*, the *effective dispersal volume shall* be based on the *occupied space* or nonoccupied space served by a *refrigeration system*.

7.2.3 Volume Calculations. The *effective dispersal volume* used to calculate the *effective dispersal volume charge* (*EDVC*) given in Section 7.3 *shall* be based on the volume calculations *specified* in Sections 7.2.3.1 through 7.2.3.4.

7.2.3.1 Room Volume. The *effective dispersal volume shall* be established by the following physical enclosure elements: walls, floors, ceilings, windows or doors that can be closed, and partitions connecting to and extending from the finished floor to more than 5.5 ft (1.7 m) above the floor. Where different stories and floor levels connect through an open atrium or mezzanine, the *effective dispersal volume shall* be determined by multiplying the floor area of the lowest floor level by 8.2 ft (2.5 m) ceiling height.

7.2.3.1.1 Exempted Spaces. The areas that contain only continuous *refrigerant piping*, or contain only joints and connections that have been tested in accordance with Section 9.13, are exempt from the *effective dispersal volume* calculation unless these areas are part of *connected spaces* per Section 7.2.3.2.

7.2.3.2 Connected Spaces via Natural Ventilation. *Connected spaces shall* be on the same floor. *Connected spaces shall* be provided with permanent natural ventilation opening(s). Permanent natural ventilation opening(s) *shall* be sized in accordance with Section 7.2.3.2.1 or 7.2.3.2.2. The lower edge of the natural ventilation opening between rooms *shall* be located a maximum of 12 in. (305 mm) above the finished floor. The area of any openings above 12 in. (305 mm) from the floor *shall not* be considered. The required size of opening(s) *shall* be based on the net free area.

7.2.3.2.1 Natural Ventilation Opening for Group A1 Refrigerants. The minimum size of the opening for a Group A1 *refrigerant* (A_{vent}) *shall* be calculated using Equation 7-1a or 7-1b:

$$A_{vent} = \frac{m_{rel} - m_{room}}{RCL \times 0.833} \times \sqrt{\frac{A}{g \times m_{room}} \times \frac{M_r}{M_r - M_a}} \quad \text{(7-1a [I-P])}$$

$$A_{vent} = \frac{m_{rel} - m_{room}}{RCL \times 208} \times \sqrt{\frac{A}{g \times m_{room}} \times \frac{M_r}{M_r - M_a}} \quad \text{(7-1b [SI])}$$

where

A_{vent} = minimum area of a permanent opening, ft^2 (m^2)
m_{rel} = *releasable refrigerant charge*, lb (kg)
m_{room} = allowable *refrigerant* charge of an individual room, lb (kg); (V_{eff}, used to calculate *EDVC*, is the volume of an individual room.)
RCL = *refrigerant concentration limit*, lb/1000 ft^3 (kg/m^3)
A = actual area of the individual room, ft^2 (m^2)
M_a = *relative molar mass* of air, 29.0, dimensionless
M_r = *relative molar mass* of the *refrigerant*, dimensionless
g = acceleration due to gravity, 32.2 ft/s^2 (9.81 m/s^2)
0.833 = I-P conversion factor
208 = SI conversion factor

Equations 7-1a and 7-1b are not applicable for *refrigerants* with a *relative molar mass* less than 42.

7.2.3.2.2 Natural Ventilation Opening for Group A2L, A2, or A3 Refrigerants. The minimum size of the opening for a Group A2L, A2, or A3 *refrigerant* (A_{vent}) *shall* be calculated using Equation 7-2a or 7-2b:

$$A_{vent} = \frac{m_{rel} - m_{room}}{LFL \times 0.417} \times \sqrt{\frac{A}{g \times m_{room}} \times \frac{M_r}{M_r - M_a}} \quad \text{(7-2a [I-P])}$$

$$A_{vent} = \frac{m_{rel} - m_{room}}{LFL \times 104} \times \sqrt{\frac{A}{g \times m_{room}} \times \frac{M_r}{M_r - M_a}} \quad \text{(7-2b [SI])}$$

where

A_{vent} = minimum area of a permanent opening, ft^2 (m^2)
m_{rel} = *releasable refrigerant charge*, lb (kg)
m_{room} = allowable *refrigerant* charge of an individual room, lb (kg); (V_{eff}, used to calculate *EDVC*, is the volume of an individual room.)
LFL = *lower flammability limit*, lb/1000 ft^3 (kg/m^3)
A = actual area of the individual room, ft^2 (m^2)
M_a = *relative molar mass* of air, 29.0, dimensionless
M_r = *relative molar mass* of the *refrigerant*, dimensionless
g = acceleration due to gravity, 32.2 ft/s^2 (9.81 m/s^2)
0.417 = I-P conversion factor
104 = SI conversion factor

Equations 7-2a and 7-2b is not applicable for *refrigerants* with a *relative molar mass* less than 42.

7.2.3.3 Connected Spaces via Ducted Air Distribution System. Where a *refrigeration system* or a part thereof is located within an air distribution *duct* system or in a space served by an air distribution *duct* system, the entire air distribution system *shall* be analyzed to determine the worst-case distribution of leaked *refrigerant*. The *effective dispersal volume* into which the leaked *refrigerant* disperses *shall* be used to determine the *EDVC* in the *refrigeration system*, subject to the criteria in the following subsections.

7.2.3.3.1 Closures. Closures in the air distribution system *shall* be considered. If one or more spaces of several arranged in parallel can be closed off from the source of the *refrigerant* leak, their volumes *shall not* be used in the calculation. Smoke dampers, fire dampers, and combination smoke/fire dampers that close only in an emergency not associated with a *refrigerant* leak *shall not* be classified as closure devices. Dampers, such as variable-air-volume (VAV) boxes, *shall not* be considered a closure, provided the airflow is not reduced below 10% of its maximum.

7.2.3.3.2 Plenums. The volume of an air ceiling plenum or floor plenum *shall* be included when calculating the *effective dispersal volume* where the plenum space is a part of the *refrigeration system* air distribution system.

7.2.3.3.3 Supply and Return Ducts. The volume of the supply and return *ducts shall* be included when calculating the *effective dispersal volume*.

7.2.3.4 Connected Spaces via Mechanical Ventilation. Where two or more spaces are connected by a mechanical ventilation system complying with the requirements of Section 7.6.4, the volume of all such *connected spaces shall* be included in the *effective dispersal volume* used to calculate the *EDVC* in Section 7.3.

7.2.3.4.1 Ductwork. The volume of the transfer air ductwork *shall* be included when calculating the *effective dispersal volume*.

7.3 Refrigerant Charge Limits. The *EDVC shall* be calculated in accordance with this section. All *refrigeration systems shall* follow the compliance path in Figures 7-1 and 7-2 and the limitation of Section 7.3.2.

7.3.1 EDVC Calculation. The maximum charge permitted for an *effective dispersal volume shall* be calculated using Equation 7-3a or 7-3b, except for *refrigeration systems* covered by Section 7.3.1.1:

$$EDVC = RCL \times V_{eff} \times F_{occ} \quad \text{(7-3a [I-P])}$$

$$EDVC = RCL \times V_{eff} \times F_{occ}/1000 \quad \text{(7-3b [SI])}$$

see Table 7-1

where

$EDVC$ = *effective dispersal volume charge*, lb (kg)
RCL = *refrigerant concentration limit*, lb/ft^3 (g/m^3)
V_{eff} = *effective dispersal volume*, ft^3 (m^3), established using Sections 7.2.1 through 7.2.3
F_{occ} = *occupancy* adjustment factor (For all *occupancies* other than institutional, F_{occ} has a value of 1. For *institutional occupancies*, F_{occ} has a value of 0.5.)

7.3.1.1 EDVC Calculation for High-Probability Air Conditioners, Heat Pumps, and Dehumidifiers Using Group A2L Refrigerants. The maximum charge permitted for an *effective dispersal volume shall* be calculated according to Section 7.6 for air conditioners, *heat pumps*, or dehumidifiers classified as a *high-probability system* and using Group A2L *refrigerants*.

7.3.2 Institutional Occupancies Refrigerant Charge Limits. For *institutional occupancies*, the total *refrigerant* charge of all *refrigeration systems* containing Group A2, A3, B2, and B3 *refrigerants* in occupied areas and *machinery rooms shall not* exceed 550 lb (250 kg).

7.3.3 Industrial Occupancies and Refrigerated Rooms. *Industrial occupancies* and refrigerated rooms *shall* comply with the following conditions:

a. Spaces containing the *machinery* are separated from other *occupancies* by tight construction with tight-fitting doors.
b. *Access* is restricted to authorized personnel.
c. *Refrigerant detectors* are installed with the sensing location and alarm level as required in refrigeration *machinery rooms* in accordance with Section 8.9.5.
d. Surfaces exceeding 800°F (426.7°C), or open flames, are not permitted where any Group A2, A3, B2, or B3 *refrigerant* is used.
e. Surfaces exceeding 1290°F (700°C), or open flames, are not permitted where any Group A2L or B2L *refrigerant* is used.
f. Where loss of the *releasable refrigerant charge* of Group A2, A3, B2, or B3 *refrigerant* would result in an average *refrigerant* concentration that exceeds 25% of the *lower flammability limit* (*LFL*), electrical equipment in the space is Class I, Division 2, in accordance with *National Electric Code*® (NFPA 70).[4]
g. *Refrigerant*-containing parts in *refrigeration systems* exceeding 100 *hp* (74.6 kW) *compressor* drive power, except *evaporators* used for refrigeration or dehumidification, *condensers* used for heating, control and *pressure relief valves* for either, *low-probability pumps*, and connecting *piping*, are located either in a *machinery room* or outdoors.

7.3.4 Releasable Refrigerant Charge (m_{rel}) Determination. The *releasable refrigerant charge* (m_{rel}) *shall* comply with the requirements of Section 7.3.1. The *releasable refrigerant charge shall* be determined in accordance with Sections 7.3.4.1 through 7.3.4.4. *Releasable refrigerant charge* determination in accordance with Sections 7.3.4.3 and 7.3.4.4 *shall not* be permitted for *institutional occupancies*.

7.3.4.1 Single Circuit. For single-circuit *refrigeration systems*, the *releasable refrigerant charge* (m_{rel}) *shall* be the *system refrigerant charge*, unless release mitigation controls are provided in accordance with Section 7.3.4.4.

7.3.4.2 Multiple Independent Circuits. For *refrigeration systems* with multiple *independent circuits*, the *releasable refrigerant charges shall* be the *refrigerant charges* in each *independent circuit*, unless release mitigation controls are provided in accordance with Section 7.3.4.4.

7.3.4.3 Calculating Releasable Refrigerant Charge. For *releasable refrigerant charge*, release mitigation controls complying with Section 7.3.4.4 *shall* be provided to limit a release by automatically isolating leaking *piping* or equipment. The *releasable refrigerant charge* (m_{rel}) *shall* be determined based on a release of the volume of *refrigerant* that will occur prior to operation of the release mitigation control plus the volume of *refrigerant* contained downstream of a release mitigation control in accordance with Equation 7–4a or 7-4b:

$$m_{rel} = (t_{r1} \times 0.0062) + m_{r2} + m_{r3} \quad \text{(7-4a [I-P])}$$

$$m_{rel} = (t_{r1} \times 0.0028) + m_{r2} + m_{r3} \quad \text{(7-4b [SI])}$$

where

t_{r1} = time before the leak is detected per Section 7.6.2.4
0.0062 = leakage rate in lb/s
0.0028 = leakage rate in kg/s
m_{r2} = leakage between the detection of the leak and the closing of the *safety shutoff valve*, lb (kg)
m_{r3} = leakage in the *piping* downstream of the *safety shutoff valve* after the valve is closed, lb (kg)

$$m_{r2} = t_{close} \times 0.0062 \quad \text{(7-5a [I-P])}$$

$$m_{r2} = t_{close} \times 0.0028 \quad \text{(7-5b [SI])}$$

where

t_{close} = time from when a leak is detected until the *safety shutoff valve* closes
0.0062 = leakage rate in lb/s
0.0028 = leakage rate in kg/s

$$m_{r3} = \Sigma V_{pipe} \times \rho_{ref} \quad \text{(7-6)}$$

where

V_{pipe} = internal volume of each section of the *piping* and *heat exchanger coil* downstream of the *safety shutoff valve*, ft^3 (m^3)
ρ_{ref} = density of the *refrigerant* in each section of pipe downstream of the *safety shutoff valve*, lb/ft^3 (kg/m^3)

7.3.4.4 Release Mitigation Controls. Release mitigation controls used to limit the *releasable refrigerant charge* (m_{rel}) *shall* comply with the following:

a. Release mitigation systems *shall* be components of a *refrigeration system* that is *listed* per UL 60335-2-40 [5]/CSA C22.2 No. 60335-2-40 [6] or UL 60335-2-89 [7]/CSA C22.2 No. 60335-2-89 [8] and evaluated by the *nationally recognized testing laboratory* as part of the listing.
b. Release mitigation controls *shall* only be permitted for reducing the *releasable refrigerant charge* (m_{rel}) on a *refrigeration system* where each indoor unit has a cooling capacity of 5 tons (17.5 kW) or less.
c. Release mitigation controls *shall* be activated by a *refrigerant detection system*. A *refrigerant detector shall* be located either in all refrigeration equipment serving the spaces or in all spaces served by the release-mitigation-controlled circuit. The *refrigerant detector shall* activate the release mitigation controls and isolate all possible paths of *refrigerant* that can leak into the space(s).
d. In the event of a failure of the release mitigation controls or a *refrigerant detector*, the release mitigation controls *shall* isolate all possible paths of *refrigerant* that can leak into the space(s).
e. *Refrigerant detectors shall* comply with Section 7.6.2.4 and *shall* activate the mitigation controls per Section 7.6.2.5. For Group A1 *refrigerants*, 100% of *RCL shall* be substituted in place of 25% of *LFL*.
f. The location of *refrigerant* mitigation controls *shall* be marked in accordance with the requirements of ASME A13.1.[9]
g. Release mitigation controls *shall* be tested in accordance with Section 9.13.
h. *Safety shutoff valves shall* be accessible to authorized personnel.
i. Where applied to standby or redundant *refrigeration systems*, *safety shutoff valves shall* be in the closed position for both standby mode and off mode.

BUILDING AND SAFETY DIVISION
Department of Public Works
FINAL ENERGY APPROVED
UNDER CCR TITLE 24, PART 1,
ARTICLE 1 & PART 6
JMoon
PUBLIC WORKS
04/20/2026 10:58:07 AM
This set of plans and specifications must be kept at the job site at all times, and it is unlawful to make any changes, modifications or alterations to these plans or specifications without the prior written permission of the Building Official. The stamping of this set of plans and specifications SHALL NOT, under any circumstances, be deemed to permit or to be an approval of any work or activity that violates any provisions of any County Ordinance or State Law

BUILDING AND SAFETY DIVISION
Department of Public Works
APPROVED
UNDER LOS ANGELES COUNTY CODE
TITLE 29
JMoon
PUBLIC WORKS
04/20/2026 10:56:01 AM
This set of plans and specifications must be kept at the job site at all times, and it is unlawful to make any changes, modifications or alterations to these plans or specifications without the prior written permission of the Building Official. The stamping of this set of plans and specifications SHALL NOT, under any circumstances, be deemed to permit or to be an approval of any work or activity that violates any provisions of any County Ordinance or State Law

BASE RAIL W/ VIBRATION ISOLATORS AND SEISMIC RESTRAINT DETAIL FOR OU-1 AND OU-2

1
NTS

WILLIAM LOYD JONES
ARCHITECT
9415 culver boulevard
culver city, california
9 0 2 3 2
TEL 310 392 3995

ADDENDUM# 3 - BID SET - APRIL 30, 2026

KHALIFEH & ASSOCIATES
CONSULTING ENGINEERS
1625 W. OLYMPIC BLVD. #791, LOS ANGELES, CA 90
Tel: (310) 305-1555 Fax: (310) 305-1550
www.KhalifehAssociates.com
252671
REGISTERED PROFESSIONAL ENGINEER
JACK Y. KHALIFEH
No. M025454
Exp. SEPT. 2026
STATE OF CALIFORNIA

ASHRAE 15-2024
MAXIMUM REFRIGERANT EXPOSURE
LIMIT CALCULATION (Mrel)

FIRE STATION 46
COUNTY OF LOS ANGELES FIRE DEPARTMENT
26720 BOMBERO LANE
VALENCIA, CALIFORNIA

FIVEPOINT Project

Issue	
LACoFD APPROVED	11.MAR.25
100% DD SET	17.APR.2
FIRE DEPARTMENT SUBMITTAL SET	20.MAY.25
PLAN CHECK SUBMITTAL SET	13.AUG.2
PLAN CHECK RESUBMITTAL SET	07.NOV.2
PLAN CHECK RESUBMITTAL SET	17.DEC.25

THE ABOVE DRAWINGS AND SPECIFICATIONS AND IDEAS, DESIGNS AND ARRANGEMENTS REPRESENTED THEREIN ARE AND SHALL REMAIN THE PROPERTY OF THE ARCHITECT AND WERE PREPARED FOR USE ON THE PROJECT DESIGNATED THEREIN AND ARE NOT TO BE USED IN CONNECTION WITH ANY WORK OR PROJECT OTHER THAN THE SPECIFIC PROJECT FOR WHICH THEY HAVE BEEN PREPARED AND DEVELOPED WITHOUT THE WRITTEN CONSENT OF THE ARCHITECT. ANY USE WHICH MAY BE MADE OF THESE DRAWINGS OR SPECIFICATIONS SHALL CONSTITUTE CONCLUSIVE EVIDENCE OF ACCEPTANCE OF THESE RESTRICTIONS.

WRITTEN DIMENSIONS ON THESE DRAWINGS SHALL HAVE PRECEDENCE OVER SCALED DIMENSIONS. CONTRACTORS SHALL VERIFY AND BE RESPONSIBLE FOR ALL DIMENSIONS AND CONDITIONS ON THE JOB AND THIS OFFICE MUST BE NOTIFIED OF ANY VARIATIONS AFFECTING THE STRUCTURE BEFORE PROCEEDING IN THE WORK. SHOP DRAWINGS, SHOP DETAILS, MUST BE SUBMITTED TO THIS OFFICE FOR APPROVAL BEFORE PROCESSING WITH FABRICATION.
Copyright 2005

Date	17.DEC.25
Drawn	BDL
Checked	JK
Scale	NTS
Job. No.	

M4.11

Plot date : 2026-03-18

WIRING SYSTEM NOTES:

1. ALL CONTROL THERMOSTATS AND LOW VOLTAGE WIRING INCLUDING CONDUITS LESS THAN 50 VOLTS SHALL BE FURNISHED, WIRED AND INSTALLED BY MECHANICAL CONTRACTOR (U.N.O.).
2. ALL CONTROL WIRING SHALL BE INSTALLED IN RIGID CONDUITS. THE CONDUITS FOR CONTROL WIRING SHALL BE INSTALLED BY MECHANICAL CONTRACTOR.
3. ALL POWER WIRING, DISCONNECT SWITCHES, CIRCUIT BREAKERS, FUSES, RELAYS, CONTROL TRANSFORMER, ETC. SHALL BE FURNISHED & INSTALLED BY ELECTRICAL CONTRACTOR. (U.N.O.)
4. ALL POWER AND CONTROL WIRING FOR 50 VOLTS AND ABOVE SHALL BE ROUTED THRU SUITABLE RIGID CONDUIT PROVIDED AND INSTALLED BY ELECTRICAL CONTRACTOR.
5. UNLESS INDICATED OTHERWISE, INSTALL ALL ACCESSORY CONTROL DEVICES SUCH AS TIMELOCKS, CONTROL TRANSFORMERS AND RELAYS IN LOCATIION AS NOTED ON PLANS OR AS DIRECTED BY OWNER. LOCATIONS SHALL BE IN ACCORDANCE WITH CODE AND LOCAL AUTHORITIES REQUIREMENTS.
6. ALL EQUIPMENT AND COMPONENTS SHALL BE INSTALLED IN ACCORDANCE WITH MANUFACTURER'S INSTRUCTIONS AND LOCAL CODE REQUIREMENTS.
7. REFER TO ELECTRICAL DRAWINGS FOR POWER WIRING OF FANCOILS UNITS, OUTDOORS HEATPUMP UNITS, AND EXHAUST FANS.
8. CONTROL SCHEMATICS ARE FOR SEQUENCE ONLY. REFER TO ELECTRICAL DRAWINGS AND SPEC. FOR ALL ELECTRICAL DEVICES REQUIRED.
9. SEE PLANS FOR LOCATION OF CONTROL COMPONENTS OR FIELD COORDINATE AS REQ.
10. M INDICATES IN MECHANICAL SCOPE
    E INDICATES IN ELECTRICAL SCOPE

CONTROL LEGEND

SYMBOL	ABBREVIATION	DESCRIPTION	
E		ITEM TO BE FURNISHED AND INSTALLED UNDER ELECTRICAL DIVISION	
		SLASHES INDICATE NO. OF WIRES	
	MS	MAGNETIC STARTER	E
	NO	NORMALLY OPEN ELECTRICAL CONTACT	E
	NC	NORMALLY CLOSED ELECTRICAL CONTACT	E
	CR	ELECTRICAL COIL RELAY	E
	OVL	OVERLOAD	E
	PL	PILOT LIGHT	E
	S	ON-OFF SWITCH	E
H O A		HAND-OFF-AUTOMATIC SWITCH	E
	TS	TEMPERATURE SWITCH	
	FS	FLOW SWITCH	
		FLOAT SWITCH	
	TD	TIME DELAY SWITCH	E
	DISC. S	DISCONNECT SWITCH	E
	CB	CIRCUIT BREAKER	E
		SENSOR(TEMPERATURE,HUMIDITY ETC.)	
	P	PRESSURE SENSOR	
	SD	SMOKE DETECTOR	E
OL		SINGLE PHASE MOTOR W/BUILT-IN OVERLOAD	
EM	EM	ON EMERGENCY POWER	
MCC	MCC	MOTOR CONTROL CENTER	E
CP	CP	CONTROL PANEL	
T H		THERMOSTAT. HUMIDISTAT	
		LINE VOLTAGE	E
		LOW VOLTAGE	
M	M	ACTUATOR FOR VALVE OR DAMPER.	
ME	ME	FURNISHED AND INSTALLED BY MECH. CONTRACTOR WIRED AND TESTED BY ELECTRICAL CONTRACTOR	

ALL LINE VOLTAGE RIGID CONDUITS & WIRES BY ELECTRICAL CONTRACTOR.
ALL LOW VOLTAGE WIRED BY MECHANICAL CONTRACTOR.
ALL LOW VOLTAGE RIGID CONDUITS BY MECHANICAL CONTRACTOR.

WIRING SYSTEM NOTES 7 NTS

NOT USED 5 NTS

NOT USED 2 NTS

BUILDING AND SAFETY DIVISION
Department of Public Works
FINAL ENERGY APPROVED
UNDER CGR TITLE 24, PART 1, ARTICLE 1 & PART 6
JMoon
PUBLIC WORKS
04/20/2026 10:58:07 AM
This set of plans and specifications must be kept at the job site at all times, and it is unlawful to make any changes, modifications or alterations to these plans or specifications without the prior written permission of the Building Official. The stamping of this set of plans and specifications SHALL NOT, under any circumstances, be deemed to permit or to be an approval of any work or activity that violates any provisions of any County Ordinance or State Law

BUILDING AND SAFETY DIVISION
Department of Public Works
APPROVED
UNDER LOS ANGELES COUNTY CODE
TITLE 29
JMoon
PUBLIC WORKS
04/20/2026 10:56:01 AM
This set of plans and specifications must be kept at the job site at all times, and it is unlawful to make any changes, modifications or alterations to these plans or specifications without the prior written permission of the Building Official. The stamping of this set of plans and specifications SHALL NOT, under any circumstances, be deemed to permit or to be an approval of any work or activity that violates any provisions of any County Ordinance or State Law

NOT USED 8 NTS

NOT USED 6 NTS

NOT USED 4 NTS

NOT USED 3 NTS

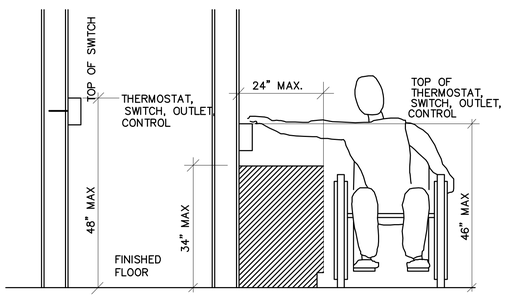

THERMOSTAT MOUNTING HEIGHT OVER OBSTRUCTION 1 NTS

WILLIAM LOYD JONES
ARCHITECT
9415 culver boulevard
culver city, california
9 0 2 3 2
TEL 310 392 3995

ADDENDUM# 3 - BID SET - APRIL 30, 2026

KHALIFEH & ASSOCIATES
CONSULTING ENGINEERS
1625 W. OLYMPIC BLVD. #791, LOS ANGELES, CA 90
Tel: (310) 305-1555 Fax: (310) 305-1550
www.KhalifehAssociates.com
252671
REGISTERED PROFESSIONAL ENGINEER
JACK Y. KHALIFEH
No. M025454
Exp. SEPT. 2026
STATE OF CALIFORNIA

CONTROL AND WIRING DIAGRAMS

FIRE STATION 46
COUNTY OF LOS ANGELES FIRE DEPARTMENT
26720 BOMBERO LANE
VALENCIA, CALIFORNIA

FIVEPOINT Los Angeles

Issue	
LACoFD APPROVED	11.MAR.25
100% DD SET	17.APR.25
FIRE DEPARTMENT SUBMITTAL SET	20.MAY.25
PLAN CHECK SUBMITTAL SET	13.AUG.25
PLAN CHECK RESUBMITTAL SET	07.NOV.25
PLAN CHECK RESUBMITTAL SET	17.DEC.25

THE ABOVE DRAWINGS AND SPECIFICATIONS AND IDEAS, DESIGNS AND ARRANGEMENTS REPRESENTED THEREBY ARE AND SHALL REMAIN THE PROPERTY OF THE ARCHITECT AND ARE TO BE RETURNED TO THE ARCHITECT. DISCLOSED TO OTHERS OR USED IN CONNECTION WITH ANY WORK OR PROJECT OTHER THAN THE SPECIFIC PROJECT FOR WHICH THEY HAVE BEEN PREPARED AND DEVELOPED WITHOUT THE WRITTEN CONSENT OF THE ARCHITECT. USE OF CONTRACT WITH THESE DRAWINGS OR SPECIFICATIONS SHALL CONSTITUTE CUMULATIVE EVIDENCE OF ACCEPTANCE OF THESE RESTRICTIONS.

WRITTEN DIMENSIONS ON THESE DRAWINGS SHALL HAVE PRECEDENCE OVER SCALED DIMENSIONS. CONTRACTORS SHALL VERIFY AND BE RESPONSIBLE FOR ALL DIMENSIONS AND CONDITIONS ON THE JOB AND THIS OFFICE MUST BE NOTIFIED OF ANY VARIATIONS FROM THE DIMENSIONS AND CONDITIONS SHOWN BY THESE DRAWINGS AND MUST APPROVE ANY SUBSTITUTIONS TO THIS OFFICE FOR APPROVAL BEFORE PROCEEDING WITH FABRICATION.

Copyright 2005

Date	17.DEC.25
Drawn	BDL
Checked	JK
Scale	NTS
Job. No.	

M5.1

Plot date : 2026-03-18

NOT USED

4

NTS

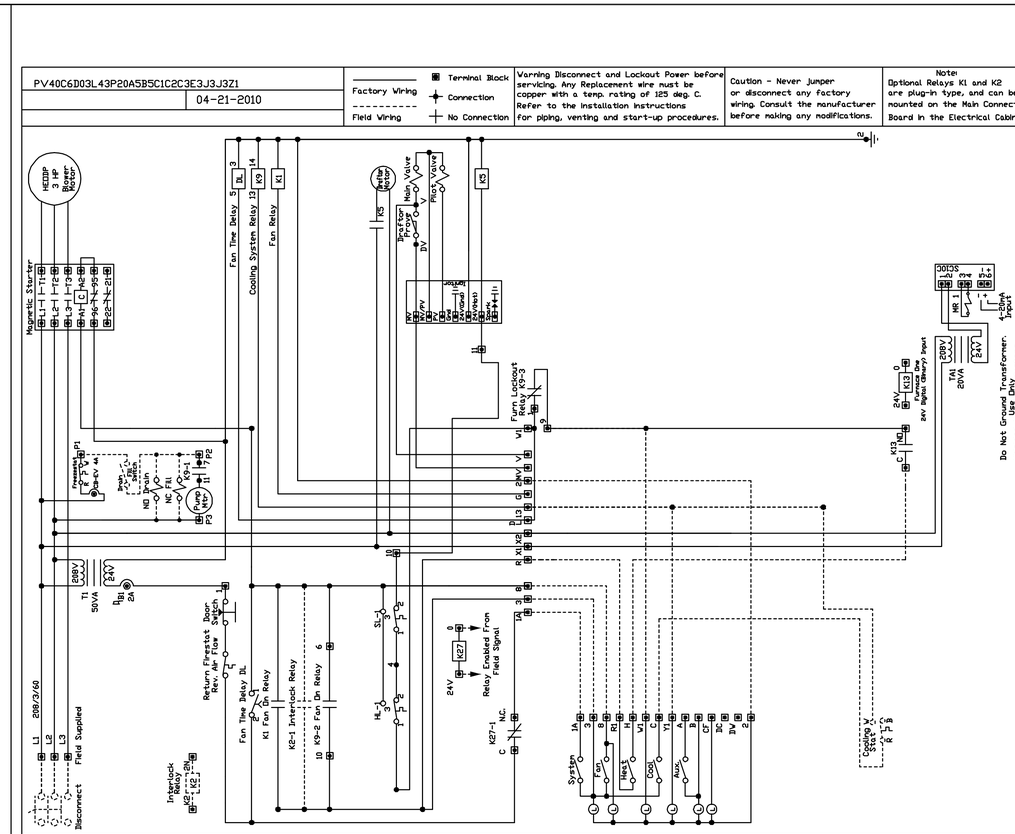

MUA–1 WIRING DIAGRAM

2

NTS

GARAGE EXHAUST SYSTEM OF OPERATION

THE VEHICLE EXHAUST REMOVAL SYSTEM SHALL CAPTURE EXHAUST EMISSIONS DIRECTLY AT THE TAIL PIPE BY MEANS OF A NOZZLE FITTED TO THE TAIL PIPE, WITHOUT A POSITIVE SEAL OR CLAMPING CONNECTION, AND EXHAUST THEM SAFELY TO A SPECIFIED AREA OUTSIDE THE BUILDING BY MEANS OF AN EXHAUST FAN.

UPON THE VEHICLE BEING STARTED, A PRESSURE SWITCH LOCATED IN THE SYSTEM SHALL ENERGIZE THE SYSTEM EXHAUST FAN. THE FAN SHALL REMAIN ENERGIZED AS LONG AS THE VEHICLE IS RUNNING.

UPON VEHICLE EXIT, THE NOZZLE OF LOWER HOSE ASSEMBLY SHALL REMAIN CONNECTED TO THE TAIL PIPE AND AUTOMATICALLY DISCONNECTS AT A SPECIFIED DISTANCE FROM THE EXIT DOOR BY DE–ENERGIZING THE ELECTROMAGNET. THE NOZZLE AND LOWER HOSE ASSEMBLY SHALL SEPARATE SMOOTHLY FROM THE VEHICLE AND RETRACT SAFELY TO A STORED POSITION READY TO CONNECT TO THE VEHICLE UPON REENTRY.

UPON DISCONNECTION, THE HOSE ASSEMBLY SHALL NOT BE PERMITTED TO SWING WIDE OR TOUCH THE FLOOR, ONCE THE VEHICLE HAS LEFT THE BUILDING, THE FAN WILL AUTOMATICALLY SHUT OFF AFTER A PRESET TIME INTERVAL.

UPON RETURN, THE FAN IS AUTOMATICALLY ACTIVATED PRIOR TO VEHICLE ENTRY AS THE NOZZLE IS PLACE AGAINST/OVER THE TAIL PIPE. NO POSITIVE LOCK DEVICE OR MOVING PARTS SHALL BE PERMITTED TO CONNECT TO BE CONNECTED TO THE TAIL PIPE.
AFTER THE VEHICLE HAS BEEN TURNED OFF, THE FAN CONTINUES TO OPERATE FOR A PRESET TIME INTERVAL, NORMALLY TWO MINUTES.

APPARARATUS ROOM EXHAUST SYSTEM OF OPERATION

3

NTS

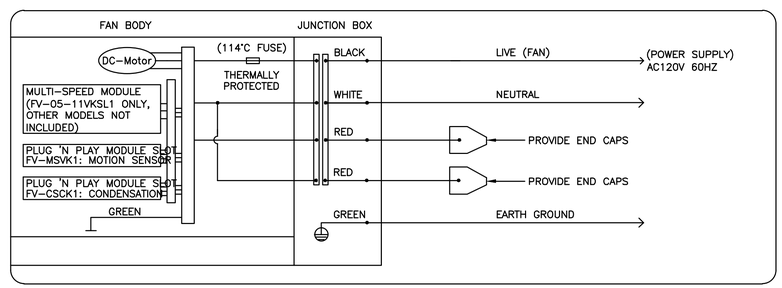

MOTION SENSOR PANASONIC EXHAUST FAN
NOTE:

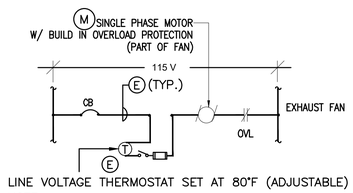

LINE VOLTAGE THERMOSTAT SET AT 80°F (ADJUSTABLE)
NOTE:

EF–7

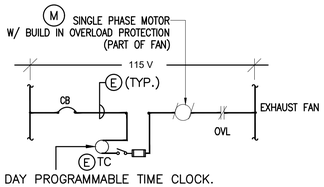

7 DAY PROGRAMMABLE TIME CLOCK.
NOTE:

EF–6

E FURNISHED & INSTALLED BY ELECTRICAL
M FURNISHED & INSTALLED BY MECHANICAL
ALL LINE VOLTAGE CONDUITS AND WIRES BY ELECTRICAL CONTRACTOR

EXHAUST FAN WIRING DIAGRAM

1

NTS

BUILDING AND SAFETY DIVISION
Department of Public Works
FINAL ENERGY APPROVED
UNDER CCR TITLE 24, PART 1, ARTICLE 1 & PART 6
JMoon
PUBLIC WORKS
04/20/2026 10:58:07 AM
This set of plans and specifications must be kept at the job site at all times, and it is unlawful to make any changes, modifications or alterations to these plans or specifications without the prior written permission of the Building Official. The stamping of this set of plans and specifications SHALL NOT, under any circumstances, be deemed to permit or to be an approval of any work or activity that violates any provisions of any County Ordinance or State Law

BUILDING AND SAFETY DIVISION
Department of Public Works
APPROVED
UNDER LOS ANGELES COUNTY CODE TITLE 29
JMoon
PUBLIC WORKS
04/20/2026 10:58:01 AM
This set of plans and specifications must be kept at the job site at all times, and it is unlawful to make any changes, modifications or alterations to these plans or specifications without the prior written permission of the Building Official. The stamping of this set of plans and specifications SHALL NOT, under any circumstances, be deemed to permit or to be an approval of any work or activity that violates any provisions of any County Ordinance or State Law

WILLIAM LOYD JONES
ARCHITECT
9415 culver boulevard
culver city, california
9 0 2 3 2
TEL 310 392 3995

ADDENDUM# 3 - BID SET - APRIL 30, 2026

KHALIFEH & ASSOCIATES
CONSULTING ENGINEERS
1625 W. OLYMPIC BLVD. #791, LOS ANGELES, CA 90015
Tel: (310) 305-1555 Fax: (310) 305-1550
www.KhalifehAssociates.com
252671
REGISTERED PROFESSIONAL ENGINEER JACK Y. KHALIFEH No. M025454 Exp. SEPT. 2026 STATE OF CALIFORNIA

CONTROL AND WIRING DIAGRAMS

FIRE STATION 46
COUNTY OF LOS ANGELES FIRE DEPARTMENT
26720 BOMBERO LANE
VALENCIA, CALIFORNIA

FIVEPOINT Project

Issue	
LACoFD APPROVED	11.MAR.25
100% DD SET	17.APR.25
FIRE DEPARTMENT SUBMITTAL SET	20.MAY.25
PLAN CHECK SUBMITTAL SET	13.AUG.25
PLAN CHECK RESUBMITTAL SET	07.NOV.25
PLAN CHECK RESUBMITTAL SET	17.DEC.25

THE ABOVE DRAWINGS AND SPECIFICATIONS AND IDEAS, DESIGNS AND ARRANGEMENTS REPRESENTED THEREBY ARE AND SHALL REMAIN THE PROPERTY OF THE ARCHITECT AND NO PART THEREOF SHALL BE COPIED, DISCLOSED TO OTHERS OR USED IN CONNECTION WITH ANY WORK OTHER THAN THE SPECIFIED PROJECT FOR WHICH THEY HAVE BEEN PREPARED AND DEVELOPED WITHOUT THE WRITTEN CONSENT OF THE ARCHITECT. VISITS TO SITE BY THE ARCHITECT TO VERIFY THE CONTRACTOR'S WORK SHALL CONSTITUTE CONCLUSIVE EVIDENCE OF ACCEPTANCE OF THESE RESTRICTIONS.

WRITTEN DIMENSIONS ON THESE DRAWINGS SHALL HAVE PRECEDENCE OVER SCALED DIMENSIONS. CONTRACTORS SHALL VERIFY AND BE RESPONSIBLE FOR ALL DIMENSIONS AND CONDITIONS. DISCREPANCIES MUST BE REPORTED TO BE NOTIFIED OF ANY VARIATIONS FROM THE DIMENSIONS AND CONDITIONS SHOWN BY THESE DRAWINGS. SHOP DETAILS MUST BE SUBMITTED TO THIS OFFICE FOR APPROVAL BEFORE PROCESSING WITH FABRICATION.

Copyright 2005

Date	17.DEC.25
Drawn	BDL
Checked	JK
Scale	NTS
Job. No.	

M5.2

Plot date : 2026-03-18

FIRE STATION 46

DIAGRAM SYMBOL LEGEND	
DISPLAY	DESCRIPTION
—//—	POWER WIRE
———	CONTROL WIRE
- - - -	REF. PIPE

CONT.No	172466	PAGE	

CITY MULTI
SYSTEM SCHEMATIC DWG.

PIPING AND CONTROLS	
SYMBOL BRANCH PIPE MODEL NAME	
J1	CMY-R302S-G1
J2	CMY-R301S-G
SYMBOL LIQUID PIPE/GAS PIPE SIZE	
P1	1/4 / 1/2
P2	3/8 / 5/8
P3	3/4 / 1-1/8
SYMBOL MODEL NUMBER	
MA	PAR-40MAAU
MA	PAR-31MAA

This drawing is schematic in nature. Final routing of piping & wiring shall be determined by the installing contractor and/or designer of record

Additional refrigerant charge is needed depending on the size and length of extended piping. Please refer the amount of pre-charge and the formula of calculation which is mentioned on the data book.

1.25mm²(16 AWG) : 1.25mm²(16 AWG) or more. 0.75mm²(20 AWG) : between 0.5mm²(24 AWG) and 0.75mm²(20 AWG).

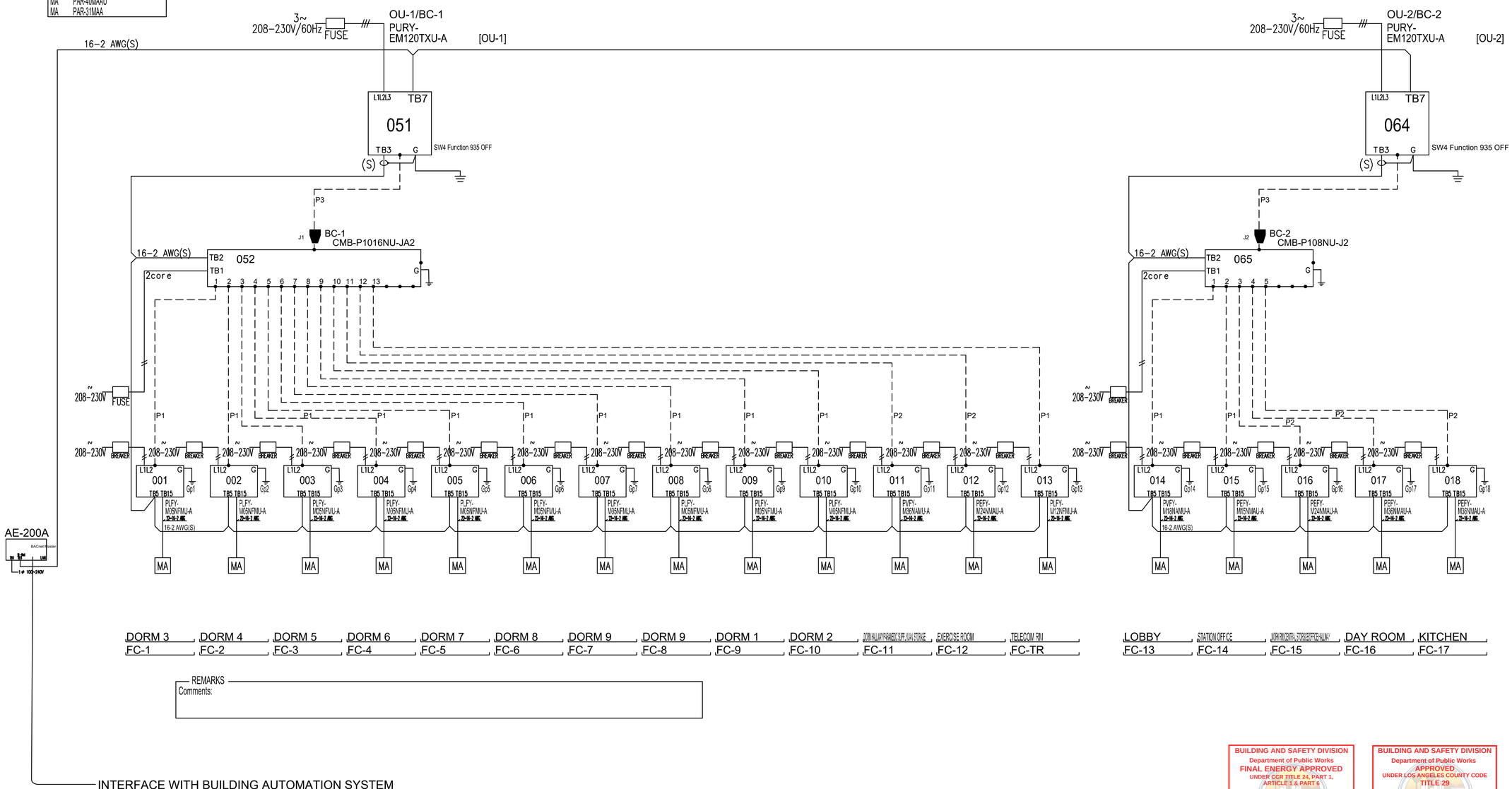

REMARKS
Comments:

INTERFACE WITH BUILDING AUTOMATION SYSTEM
BUILDING AUTOMATION SYSTEM INTEGRATION BY OTHERS (BUILDING BMS CONTROL CONTRACTOR/INSTALLER)

BUILDING AND SAFETY DIVISION
Department of Public Works
FINAL ENERGY APPROVED
UNDER CCR TITLE 24, PART 1, ARTICLE 1 & PART 6
JMoon
PUBLIC WORKS
04/20/2026 10:58:08 AM
This set of plans and specifications must be kept at the job site at all times, and it is unlawful to make any changes, modifications or alterations to these plans or specifications without the prior written permission of the Building Official. The stamping of this set of plans and specifications SHALL NOT, under any circumstances, be deemed to permit or to be an approval of any work or activity that violates any provisions of any County Ordinance or State Law

BUILDING AND SAFETY DIVISION
Department of Public Works
APPROVED
UNDER LOS ANGELES COUNTY CODE TITLE 29
JMoon
PUBLIC WORKS
04/20/2026 10:56:01 AM
This set of plans and specifications must be kept at the job site at all times, and it is unlawful to make any changes, modifications or alterations to these plans or specifications without the prior written permission of the Building Official. The stamping of this set of plans and specifications SHALL NOT, under any circumstances, be deemed to permit or to be an approval of any work or activity that violates any provisions of any County Ordinance or State Law

EXHAUST FAN WIRING DIAGRAM 1 NTS

WILLIAM LOYD JONES ARCHITECT
9415 culver boulevard
culver city, california
9 0 2 3 2
TEL 310 392 3995

ADDENDUM# 3 - BID SET - APRIL 30, 2026

KHALIFEH & ASSOCIATES
CONSULTING ENGINEERS
1625 W. OLYMPIC BLVD. #791, LOS ANGELES, CA 90015
Tel: (310) 305-1555 Fax: (310) 305-1550
www.KhalifehAssociates.com
252671
REGISTERED PROFESSIONAL ENGINEER JACK T. KHALIFEH No. M025454 Exp. SEPT. 2026 STATE OF CALIFORNIA

CONTROL AND WIRING DIAGRAMS

FIRE STATION 46
COUNTY OF LOS ANGELES FIRE DEPARTMENT
26720 BOMBERO LANE
VALENCIA, CALIFORNIA

FIVEPOINT Project

Issue	
LACoFD APPROVED	11.MAR.25
100% DD SET	17.APR.25
FIRE DEPARTMENT SUBMITTAL SET	20.MAY.25
PLAN CHECK SUBMITTAL SET	13.AUG.25
PLAN CHECK RESUBMITTAL SET	07.NOV.25
PLAN CHECK RESUBMITTAL SET	17.DEC.25

THE ABOVE DRAWINGS AND SPECIFICATIONS AND IDEAS, DESIGNS AND ARRANGEMENTS REPRESENTED THEREBY ARE AND SHALL REMAIN THE PROPERTY OF THE ARCHITECT AND THE ARCHITECT HAS THE RIGHTS DISCLOSED TO OTHERS OR USED IN CONNECTION WITH ANY WORK OR PROJECT OTHER THAN THE SPECIFIC PROJECT FOR WHICH THEY HAVE BEEN PREPARED AND DEVELOPED WITHOUT THE WRITTEN CONSENT OF THE ARCHITECT. USE OF CONTRACT WITH THESE DRAWINGS OR SPECIFICATIONS SHALL CONSTITUTE CUMULATIVE EVIDENCE OF ACCEPTANCE OF THESE RESTRICTIONS.

WRITTEN DIMENSIONS ON THESE DRAWINGS SHALL HAVE PRECEDENCE OVER SCALED DIMENSIONS. CONTRACTOR SHALL VERIFY AND BE RESPONSIBLE FOR ALL DIMENSIONS AND CONDITIONS ON THE JOB AND THIS OFFICE SHALL BE NOTIFIED OF ANY VARIATIONS FROM THE DIMENSIONS AND CONDITIONS SHOWN ON THESE DRAWINGS AND SPECIFICATIONS SUBMITTED TO THIS OFFICE FOR APPROVAL BEFORE PROCEEDING WITH FABRICATION.

Copyright 2005

Date	17.DEC.25
Drawn	BDL
Checked	JK
Scale	NTS
Job. No.	

M5.3

Plot date : 2026-03-18